Network BOX

PNB-A9001

4K AI Box Camera

Key Features

- Maximum 4K resolution
- 0.03Lux@F1.2(Color)
- Day & Night(ICR), WDR(120dB), WiseNR II (Using AI engine), Prefer Shutter
- H.265, H.264, MJPEG codec, WiseStream II , WiseStream III (Using AI engine)
- Video Analytics based on AI
- Object detection and classification(Person, Face, Vehicle, License Plate)
- Face mask detection, Social distancing detection
- Attribute, BestShot
- Requires camera firmware v1.41.03 or later to use Face Mask Detection
- System requirements
- SSM v2.10.8 or later, Genetec plugin v1.0 or later, Milestone plugin v1.0.2 or later

Compatible Accessories (Optional)

SHB-4301HP

STB-4150V

Occupancy Monitoring Application

AI Plug-in

Design and specifications are subject to change without notice. The latest product information / specification can be found at HanwhaVision.com.
Hanwha Vision is formerly known as Hanwha Techwin.

© Hanwha Vision CO., LTD. All rights reserved.

PNB-A9001

4K AI Box Camera

Specifications

Video	
Imaging Device	1/1.8" CMOS
Resolution	3840x2160, 3072x1728, 2592x1944, 2688x1520, 2560x1440, 2048x1536, 1920x1080, 1600x1200, 1280x1024,1280x960, 1280x720, 1024x768, 800 x 600, 800 x 448, 720 x 576, 720x480, 640x480, 640x360
Max. Framerate	H.265/H.264: Max. 30fps/25fps(60Hz/50Hz) MJPEG: Max. 30fps/25fps(60Hz/50Hz)
Min. Illumination	Color: 0.03Lux(F1.2, 1/30sec) B/W : 0.003Lux(F1.2, 1/30sec)
Video Out	CVBS: 1.0 Vp-p / 75Ω composite, 720x480(N), 720x576(P) for installation USB: Micro USB Type B, 1280x720 for installation

Lens	
Focus Control	Simple focus
Lens Type	DC auto iris, P iris, Manual, I-CS
Mount Type	C mount, CS mount

Operational	
Camera Title	Displayed up to 85 characters
Day & Night	Auto(ICR)
Backlight Compensation	BLC, WDR, SSDR
Digital Noise Reduction	WiseNR II (using AI engine) SSNR V
Digital Image Stabilization	Stabilization Support(built-in gyro sensor)
Motion Detection	8ea, polygonal zones
Privacy Masking	6ea, rectangle zones - Color: Gray/Black/White
Gain Control	Low / Middle / High
White Balance	ATW / AWC / Manual / Indoor / Outdoor
LDC	Support
Electronic Shutter Speed	Minimum / Maximum / Anti flicker (1/5~1/12,000sec) Auto prefer shutter control based on AI engine
Video Rotation	Flip, Mirror, Hallway view(90-/270-)
Analytics	Classified object type: Person/Face/Vehicle/License plate Attributes: Person(Gender, Color and Bag), Face(Age, Gender, Mask and Glasses), Vehicle(Type: car/bus/truck/motorcycle/bicycle and Color) Support BestShot per object Analytics events based on AI engine - Object detection, Virtual line*(Crossing/Direction), Virtual area*(Loitering/Intrusion/Enter/Exit), Face mask detection, Social distancing detection, Slip&Fall detection Analytics events - Defocus detection, Motion detection, Tampering, Audio detection, Sound classification, Shock detection, Virtual area(Appear/Disappear) Support WiseDetector for Adding custom objects *Some of the video analytics only works with people and vehicle detection

Design and specifications are subject to change without notice. The latest product information / specification can be found at HanwhaVision.com.
Hanwha Vision is formerly known as Hanwha Techwin.

© Hanwha Vision CO., LTD. All rights reserved.

Business Intelligence	People/Vehicle/Crowd counting, Queue management, Heatmap based on AI engine
Serial Interface	RS-485(Samsung-T, Pelco-D/P, Panasonic, Bosch, AD, GE, Vicon, Honeywell)
Alarm I/O	2 configurable I/O ports, DC 12V output(Max. 50mA)
Alarm Triggers	Analytics, Network disconnect, Alarm input, App event, Time schedule, MQTT subscription
Alarm Events	When alarm trigger occurred - File upload(image): e-mail/FTP - Notification: e-mail - Recording: SD/SDHC/SDXC or NAS recording at event triggers - Alarm output - Handover: PTZ preset, send message by HTTP/HTTPS/TCP - Audio clip playback - MQTT: publication
Audio In	Selectable(mic in/line in/Built in mic)
Audio Out	Line out

Network	
Ethernet	Metal shielded RJ-45(10/100/1000 BASE-T)
Video Compression	H.265/H.264: Main/High, MJPEG
Audio Compression	G.711 u-law /G.726 Selectable G.726(ADPCM) 8KHz, G.711 8KHz G.726: 16Kbps, 24Kbps, 32Kbps, 40Kbps AAC-LC: 48Kbps at 16KHz
Smart Codec	Manual(5ea area), WiseStream II , WiseStreamIII(using AI engine)
Video Quality Adjustment	H.264/H.265: Target bitrate level control MJPEG: Target bitrate level control
Bitrate Control	H.264/H.265: CBR or VBR MJPEG: VBR
Streaming	Unicast(6 users) / Multicast Multiple streaming(Up to 6 profiles)
Protocol	IPv4, IPv6, TCP/IP, UDP/IP, RTP(UDP), RTP(TCP), RTCP,RTSP, NTP, HTTP, HTTPS, SSL/TLS, DHCP, FTP, SMTP, ICMP, IGMP, SNMPv1/v2c/v3(MIB-2), ARP, DNS, DDNS, QoS, UPnP, Bonjour, LLDP, SRTP(TCP, UDP Unicast), MQTT
Application Programming Interface	ONVIF Profile S/G/T/M SUNAPI(HTTP API) Hanwha Vision Open Platform WiseAI application included Oncloud edge recording, compatible with Hanwha Vision's Micro SD cards up to 1TB

Security	
OS / Firmware Protect	Encrypted Firmware, Secure boot, Signed Firmware
User authentication	Digest Authenticaton, Prevent brute-force attack
Network authentication	IEEE 802.1X (EAP-TLS, EAP-LEAP, EAP-PEAP, MSCHAPv2)
Secure Communication	HTTPS, WSS (WebSocket Secure)
Access Control	IP-based access control
Data Protect	Encryption Credentials, Encrypt compress for live recording file
Audit	Access / System / Event Log management
Device ID	Device certificate (Hanwha Techwin Root CA)
Secure Storage	SDcard partition encrypt

General	
Webpage Language	English, French, German, Spanish, Italian, Chinese, Korean, Russian, Japanese, Swedish, Portuguese, Czech, Polish, Turkish, Dutch, Hungarian, Greek
Edge Storage	Micro SD/SDHC/SDXC 2slots 512GB
Memory	4096MB RAM, 512MB Flash

Environmental & Electrical

Design and specifications are subject to change without notice. The latest product information / specification can be found at HanwhaVision.com.
Hanwha Vision is formerly known as Hanwha Techwin.

© Hanwha Vision CO., LTD. All rights reserved.

Operating Temperature / Humidity	-10°C ~ +55°C(+14°F ~ +131°F) / Less than 90% RH
Storage Temperature / Humidity	-50°C ~ +60°C(-58°F ~ +140°F) / Less than 90% RH
Input Voltage	PoE+(IEEE802.3at), 12VDC
Power Consumption	PoE+: Max 16.50W, typical 12.50W 12VDC: Max 13.50W, typical 10.80W

Mechanical	
Color / Material	Body: Black / Aluminum
Product Dimensions / Weight	81x67x165mm(3.19x2.64x6.48"), Weight : 0.88kg(1.94lb)

Design and specifications are subject to change without notice. The latest product information / specification can be found at HanwhaVision.com.
Hanwha Vision is formerly known as Hanwha Techwin.

© Hanwha Vision CO., LTD. All rights reserved.

PNB-A9001

4K AI Box Camera

CAD

Unit:mm [inch]

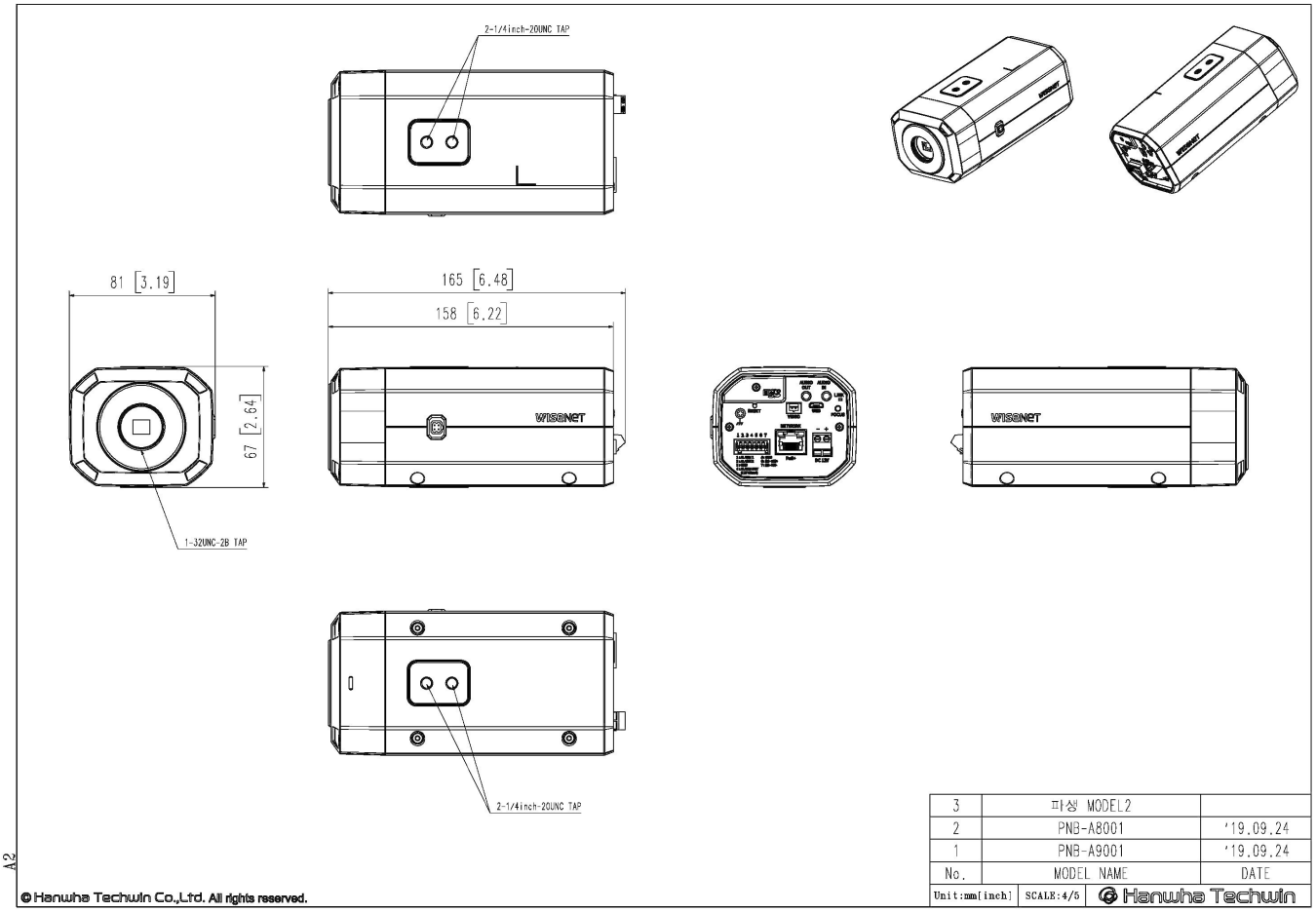

Design and specifications are subject to change without notice. The latest product information / specification can be found at HanwhaVision.com.
Hanwha Vision is formerly known as Hanwha Techwin.

© Hanwha Vision CO., LTD. All rights reserved.