DS45-430BL14

NEOMOUNTS TV DESK STAND

SPECIFICATIONS

GENERAL

Min. screen size*	32 inch
Max. screen size*	55 inch
Max. weight	40 kg (per screen)
Screens	1
VESA minimum	100x100 mm
VESA maximum	400x400 mm
Desk mount	Stand

FUNCTIONALITY

Type	Swivel
Height adjustment	11,6 cm
Lockable	Not lockable
Swivel (degrees)	+35°, -35°
Height	70,5 cm
Width	40 cm
Depth	28 cm

INFORMATION

Color	Black
Main material	Steel
Warranty	5 year
EAN code	8717371444686

*Please note: The inch sizes stated are just an indication, combined with the weight and VESA sizes. The maximum weight and VESA size are absolute restrictions for the products and should not be exceeded.

Neomounts DS45-430BL14 TV desk stand for 32-55" screens - Black

The Neomounts DS45-430BL14 is a TV desk stand for screens up to 55" with a weight capacity of 40 kg. The TV stand features a practical swivel option (70°) to easily position the TV in the optimum viewing angle. Additionally, the TV desk stand can be adjusted in height in one of the three pre-set positions.

The hefty glass base of the DS45-430BL14 provides extra screen stability, even at maximum size and weight. It provides an excellent solution for users who prefer not to drill holes in walls or for those who no longer have the original TV stand. In addition, the DS45-430BL14 also offers flexibility in screen use, as the TV stand can be moved to different places as desired.

The DS45-430BL14 is suitable for screens that meet pattern 200x200 to 400x400 mm. For non-standard hole patterns, Neomounts has various VESA optional adapter plates available. Cables can be routed neatly thanks to the practical cable clips.

Neomounts®

DS45-430BL14 NEOMOUNTS TV DESK STAND

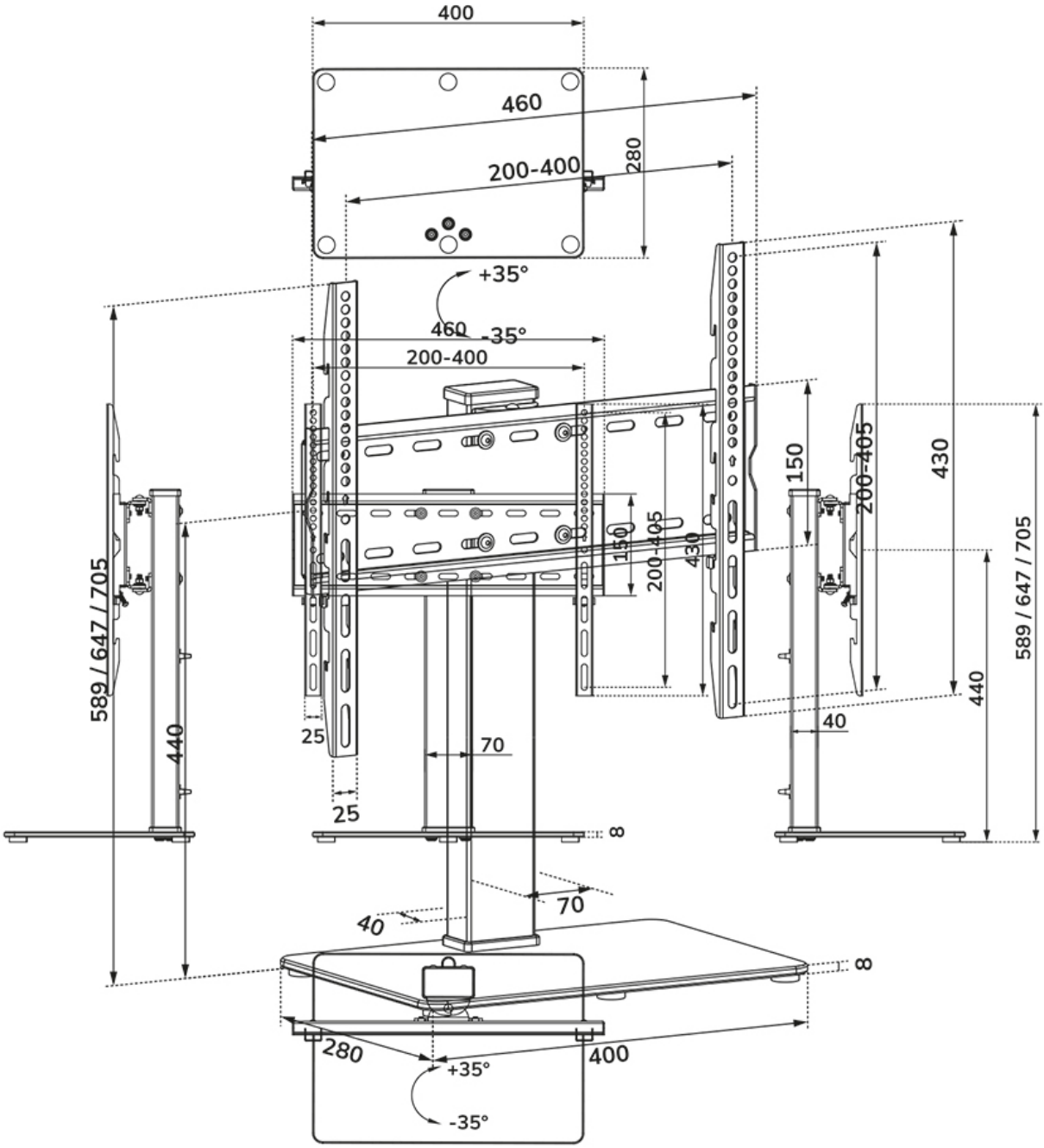

Neomounts

Measuring unit: mm