riscogroup.com

RISCO GROUP

180° Swivel/Solar Swivel Bracket for Beyond™ Outdoor Detector

Model: RA350S

EN IT ES FR NL

Installation Instructions

For more information about RISCO Group's branches, distributors and full product line, please visit **riscogroup.com**

EN Description

The 180° Swivel Bracket has been designed to provide full swivel coverage and enhanced positioning options for the Beyond™ outdoor detector.

Features include:

- Enhanced 180° swivel coverage
- Designed for outdoor installation
- Cover and wall tampers

Installation

Step 1: Preliminary Considerations

Select the mounting location for best coverage of the area that is to be protected by the detector:

- Install the swivel wall bracket ① on a stable mounting platform and at an appropriate height (see the table in Step 2: Mounting the Swivel Bracket)
- Install the swivel wall bracket ① in a location where the detector's field of view is clear of any obstacles
- Mount the swivel wall bracket ① so that walking traffic cuts across the detectors beam pattern
- **Solar Swivel Bracket:** For optimum use, install the swivel bracket in direct sunlight.

Go to *Step 2: Mounting the Swivel Bracket.*

IT Descrizione

Lo snodo 180° è stato progettato per offrire flessibilità di installazione e migliore copertura dell'area da proteggere per i rivelatori da esterno Beyond™.

Le caratteristiche includono:

- Rotazione a 180° per una maggiore copertura
- Progettato per installazioni in esterno.
- Tamper contro l'apertura e la rimozione.

Installazione

Passo 1: Considerazioni preliminari

Selezionare la posizione di installazione per una migliore copertura dell'area che il rivelatore dovrà controllare:

- Installare la staffa dello snodo ① su di una superficie solida e stabile ad una altezza adeguata (consultare la tabella al Passo 2: "Montare la staffa dello snodo")
- Installare la staffa dello snodo ① in una posizione dove il campo di vista del sensore non venga coperto da ostacoli.
- Installare la staffa dello snodo ① in modo che gli eventuali intrusi siano obbligati ad attraversarne l'area di copertura
- **Coperchio snodo con pannello solare:** Per un utilizzo ottimale installare l'unità direttamente difronte alla luce solare

Andare al passo 2: *"Montare la staffa dello snodo"*

ES Descripción

El Brazo giratorio de 180° ha sido diseñado para aportar completas posibilidades de giro y opciones de posicionamiento mejoradas para el detector Beyond™ de exterior.

Características que incluye:

- Cobertura de giro 180º mejorada
- Diseñado para uso en exteriores
- Tamper de tapa y pared.

Instalación

Paso 1: Consideraciones preliminares

Seleccione la ubicación de instalación para una mejor cobertura del área que debe protegerse con el detector:

- Instale el Brazo giratorio de pared ① sobre un soporte estable y a una Altura apropiada (vea la tabla en el paso 2: Montaje del brazo giratorio)
- Instale el Brazo giratorio de pared ① en una ubicación en la que el campo de visión del detector esté libre de cualquier obstaculo
- Sitúe el Brazo giratorio de pared ① de forma que el sentido normal de paso cruce cortando los haces del patrón de detección
- **Brazo Giratorio Solar:** Para un uso óptimo, instale el brazo giratorio en una ubicación con luz solar directa

Véase *Paso 2: Montaje del Brazo giratorio.*

FR Description

La rotule de fixation 180° a été conçue pour permettre des options de positionnement souples et optimisées pour le détecteur extérieur Beyond™.

Fonctionnalités inclues :

- Rotule 180° pour une meilleure couverture
- Conçue pour installation extérieure
- Autoprotections à l'ouverture et l'arrachement

Installation

Etape 1 : Considérations préliminaires

Choisissez l'emplacement de montage pour obtenir la meilleure couverture de la zone à protéger par le détecteur :

- Installez la plaque murale de la rotule sur une surface de montage stable à une hauteur appropriée (voir le tableau en Etape 2 : Montage de la Rotule)
- Installez la plaque murale de la rotule ① à un emplacement ou le champ de vision du détecteur est sans obstacle
- Montez la plaque murale de la rotule ① de façon à ce que les mouvement d'un intrus croisent les faisceaux IR du détecteur
- **Rotule de Fixation Solaire :** Pour une utilisation optimale, installez la rotule en plein soleil

Passez à l'étape 2 : Montage de la rotule

NL Beschrijving

De 180° Swivel beugel werd ontwikkeld om een totale omgevingsdetectie te garanderen en om de installatie opties te verhogen voor de Beyond™ buitendetector.

Eigenschappen:

- Verbeterde 180° swivel bereik
- Ontwikkeld voor buiten installatie
- Voor- en achterkant sabotage schakelaars

Installatie

Componenten gebruikt voor de montage:

Ga naar *Componenten gebruikt voor montage*

Stap 1: Aandachtspunten

Selecteer de best mogelijke montage positie zodat het detectiebereik de volledige omgeving bevat welke de detector dient te beveiligen:

- Installeer de swivel muurbeugel ① op een stabiele ondergrond en op een geschikte hoogte (zie tabel in Stap 2: Montage van de Swivel beugel)
- Installeer de swivel muurbeugel ① op een locatie waar er geen obstakels in het zichtsveld staan
- Monteer de swivel muurbeugel ① zodat wandelende voorbijgangers het beam detectie patroon doorkruisen
- **Zonnecel Swivel beugel:** Voor optimaal gebruik dient u de swivel beugel in direct zonlicht te installeren

Ga naar *Stap 2: Montage van de Swivel beugel.*

Componenets used for Mouting / Componenti usati per l'installazione / Componentes utilizados para el montaje / Composants utilisés pour le montage / Componenten gebruikt voor montage:

①	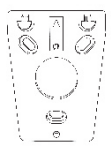	**EN:** Swivel Wall Bracket **IT:** Staffa di fissaggio a muro dello snodo **ES:** Placa de montaje para el Brazo giratorio de pared **FR:** Plaque murale de la rotule **NL:** Swivel muurbeugel
②		**EN:** Swivel Bracket **IT:** Staffa di fissaggio dello snodo **ES:** Brazo giratorio **FR:** Rotule de fixation **NL:** Swivel beugel
③		**EN:** Tapping Screw x 3 **IT:** Vite autofilettante x 3 **ES:** Tornilloo auto roscante x 3 **FR:** Vis x 3 **NL:** Schroef x 3
④	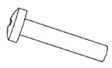	**EN:** Screw x 1 **IT:** Vite x 1 **ES:** Tornillo x 1 **FR:** Vis x 1 **NL:** Schroef x 1
⑤		**EN:** Self-Tapping Screw x 2 **IT:** Vite autofilettante x 2 **ES:** Tornillo auto roscante x 2 **FR:** Vis x 2 **NL:** Zelf-borende schroef x 2
⑥	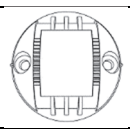	**EN:** Swivel Joint **IT:** Corona girevole **ES:** Articulación de giro **FR:** Joint de la rotule **NL:** Swivel koppeling
⑦	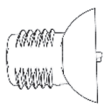	**EN:** Lock Screw **IT:** Vite di blocco **ES:** Tornillo de bloqueo **FR:** Vis de serrage **NL:** Blokkeer schroef
⑧	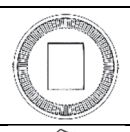	**EN:** Swivel Ring **IT:** Corona girevole **ES:** Anilla de giro **FR:** Anneau de la rotule **NL:** Swivel ring
⑨	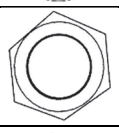	**EN:** Locking Nut **IT:** Dado di blocco **ES:** Tuerca de bloqueo **FR:** Ecrou de serrage **NL:** Blokkeermoer
⑩		**EN:** Tamper cable **IT:** Cavetto tamper **ES:** Cable de tampoer **FR:** Câble d'autoprotection **NL:** Sabotage kabel
⑪		**EN:** Swivel Bracket Cover **IT:** Coperchio snodo **ES:** Cubierta del Brazo giratorio **FR:** Couvercle de la rotule **NL:** Swivel beugel Cover
⑫	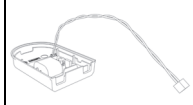	**EN:** Solar Swivel Bracket Cover with Solar Cable Connector **IT:** Coperchio snodo con pannello solare comprensivo di cavo incluso cavo di connessione **ES:** Tapa Solar para el Brazo Giratorio con Conector del cable Solar **FR:** Couvercle Solaire de la rotule avec connecteur solaire **NL:** Zonnecel Swivel beugel cover met connector voor de zonnecel

Step 2: Mounting the Swivel Bracket / Passo 2: Montare la staffa dello snodo / Paso 2: Montaje del Brazo giratorio / Etape 2 : Montage de la rotule / Stap 2: Montage van de Swivel beugel

1

EN: Loosen the screw to separate the swivel wall bracket ① from the swivel bracket ②

IT: Allentare la vite per separare la staffa di fissaggio a muro dello snodo ① da quella alla quale verrà fissato il rivelatore ②

ES: Afloje el tornillo para separar la Placa de montaje ① del Brazo giratorio ②

FR: Desserrez la vis pour séparer la plaque murale ① de la rotule de fixation ②

NL: Draai de schroef los om de muurbeugel ① van de achterplaat ② te verwijderen

2

EN: Unscrew the swivel bracket cover ⑪ or ⑫ from the swivel bracket ② and detach the solar cable connector from the bracket cover**

IT: Svitare il coperchio dello snodo ⑪ o ⑫ dalla staffa ② e separare il cavo di connessione del pannello solare dal coperchio**

ES: Desatornille la tapa del Brazo Giratorio ⑪ o ⑫ del Brazo Giratorio ② y separe el cable conector Solar de la tapa del brazo**

FR: Dévissez le couvercle ⑪ ou ⑫ de la rotule de fixation ② et détachez le connecteur solaire du couvercle**

NL: Schroef de swivel beugel cover ⑪ of ⑫ los van de swivel muurbeugel ② en koppel de connector van de zonnecel los **

** Applicable only for solar swivel bracket / Applicabile solo al coperchio dello snodo comprensivo di pannello solare / Aplicable sólo para el Brazo Solar Giratorio / Applicable uniquement pour la rotule solaire / Enkel bruikbaar met de zonnecel swivel beugel

3

EN: Unscrew the locking nut ⑨ on the swivel bracket to release components

IT: Svitare il dado di blocco ⑨ dalla staffa dello snodo per separare i vari componenti

ES: Desenrosque la tuerca de bloqueo ⑨ en el brazo giratorio para liberar los components

FR: Dévissez l'écrou de serrage ⑨ pour libérer les composants

NL: Draai de blokkeermoer ⑨ in de muurbeugel los om de onderdelen uit elkaar te halen

4

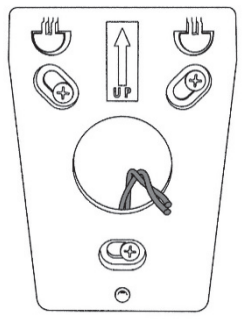

Fig. 1

EN:

i) Use the mounting holes as a template.
ii) Position the swivel wall bracket ① so that the external wiring can be pulled through the swivel wall bracket's center hole.*
iii) Secure the swivel wall bracket to the wall using the 3 Tapping Screws ③.
iv) Pull out the external wiring through the swivel wall bracket's center hole.*

IT:

i) Usare i fori di fissaggio come dima.
ii) Posizionare la staffa di fissaggio a muro ① in modo che il cablaggio esterno possa essere passato tramite il foro centrale della staffa.*
iii) Fissare la staffa tramite le tre viti autofilettanti ③
iv) Tirare il cavo passandolo dal foro centrale della staffa.*

ES:

i) Utilice los orificios de montaje como plantilla.
ii) Coloque el brazo giratorio de forma que el cableado exterior pueda pasar a través del orificio central del brazo giratorio.*
iii) Fije la Placa de pared del Brazo giratorio a la pared utilizando 3 tornillos autoroscantes ③.
iv) Tire del cable hacia el exterior a través del orificio central de la Placa de montaje del Brazo giratorio.*

FR:

i) Utilisez les trous de montages pour réaliser le marquage.
ii) Positionnez la plaque murale de la rotule de fixation ① de manière à ce que le câble puisse être tiré via le trou au centre.*
iii) Fixez la plaque murale de la rotule au mur en utilisant les 3 vis ③.
iv) Tirez le câble via le trou situé au centre de la plaque murale du support.*

NL:

i) Gebruik de montage openingen als sjabloon.
ii) Positioneer de muurbeugel ① zodat de externe bekabeling door de ronde opening in het midden van de Swivel muurbeugel kan getrokken worden.*
iii) Bevestig de muurbeugel op de wand door gebruik te maken van de 3 schroeven ③.
iv) Trek de externe bekabeling door de voorziene ronde opening in de muurbeugel.*

* Not applicable for wireless model / Non applicabile al modello radio / No aplicable a modelo inalámbrico / Non applicable pour le modèle sans fil de détecteur / Niet beschibaar op het draadloze model.

5

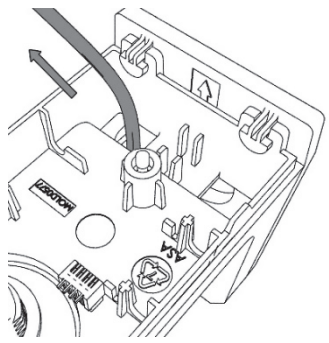

Fig. 2

EN: Insert the external wiring through one of the two swivel bracket ② wiring channels and in the direction shown.*

IT: Passare il cablaggio esterno attraverso uno dei due passaggi della staffa ②, verso la direzione mostrata.*

ES: Inserte los cables a través de uno de los canales del Brazo giratorio ②, en la dirección mostrada.*

FR:. Insérez le câble dans la rotule de fixation ② par l'un des trous prévus à cet effet, et dans la direction montrée.*

NL: Trek de externe kabel door 1 van de 2 kanalen van de Swivel beugel ② volgens de aangegeven richting.*

6

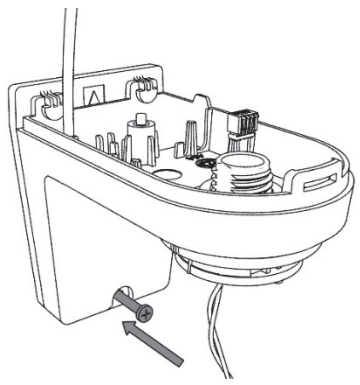

Fig. 3

EN: Mount the swivel bracket ② on the swivel wall bracket as shown. Secure the swivel bracket to the wall using the screw ④

IT: Montare lo snodo ② sulla sua staffa di fissaggio a muro. Fissare lo snodo al muro con l'apposita vite ④

ES: Monte el Brazo giratorio ② en la placa de montaje en pared como se muestra. Fije el Brazo giratorio a la pared utilizando el tornillo ④

FR: Montez la rotule de fixation ② sur la plaque murale comme montré. Sécurisez la rotule de fixation au mur en utilisant la vis ④ prévue à cet effet

NL: Monteer de swivel beugel ② op de swivel muurbeugel zoals aangegeven. Bevestig de swivel beugel op de muur via schroef ④

7

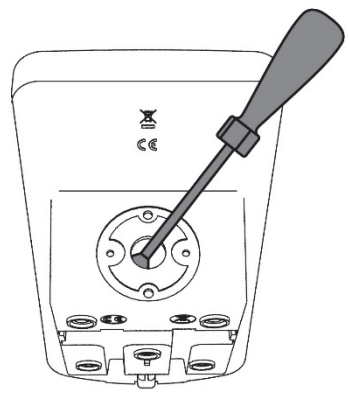

Fig. 4

EN: Using a screwdriver, break the knockout on the top of the detector wall bracket

IT: Con un cacciavite aprire il foro a sfondare nella parte superiore dello snodo

ES: Utilizando un destornillador rompa el orificio premecanizado en la parte superior del detector

FR: A l'aide d'un tournevis, cassez le trou sur le dessus du support murale du détecteur

NL: Gebruik een schroevendraaier om de uitbreekplaat voor de kabel, op de bovenzijde van de muurbeugel, te verwijderen

8

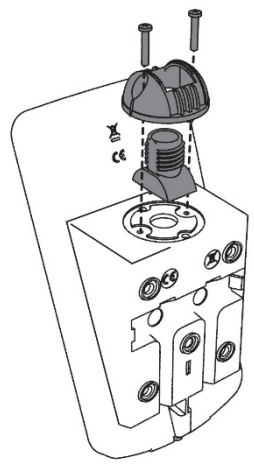

Fig. 5

EN: Assemble the swivel joint ⑥ together with the lock screw ⑦ on the detector wall bracket and secure with 2 self-tapping screws ⑤

IT: Assemblare il blocco snodo ⑥ insieme alla vite di blocco ⑦ sullo snodo e bloccarli con le due viti autofilettanti ⑤

ES: Ensamble la articulación ⑥ junto con el tornillo de bloqueo ⑦ en el soporte del detector y fíjelo con 2 tornillos auto roscantes ⑤

FR: Assemblez le joint de la rotule ⑥ avec la vis de serrage ⑦ sur le support mural du détecteur avec les 2 vis ⑤ fournies

NL: Assembleer de swivel koppeling ⑥ samen me de blokkeer schroef ⑦ op de detector's achterplaat voor op de muur en bevestig deze met de 2 zelf-borende schroeven ⑤

9

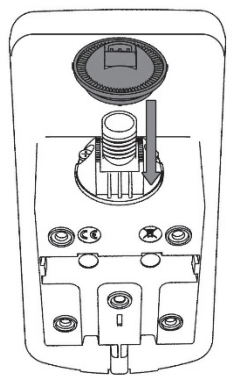

Fig. 6

EN: Assemble the swivel ring ⑧ over the swivel joint ⑥

IT: Montare la corona girevole ⑧ sullo snodo ⑥

ES: Ensamble la anilla de giro ⑧ sobre la articulación ⑥

FR: Positionnez l'anneau de la rotule ⑧ sur le joint de la rotule ⑥

NL: Plaats de swivel ring ⑧ over de swivel koppeling ⑥

10

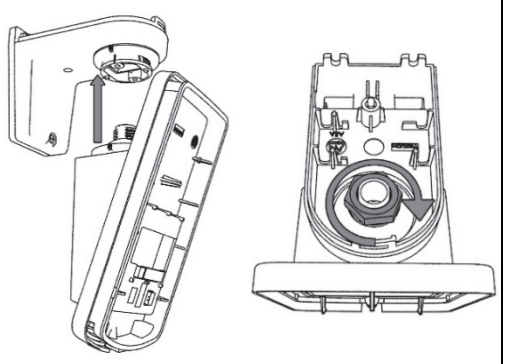

Fig. 7

EN: Mount the detector wall bracket on the swivel bracket as shown and assemble the locking nut ⑨ on the swivel ring, and then manually tighten the locking nut but not securely

IT: Montare la parte posteriore di fissaggio del rivelatore alla staffa di fissaggio dello snodo, montare il dado di blocco ⑨ sulla corona girevole e poi, con la mano, stringere il dado senza bloccarlo

ES: Monte el detector en el Brazo giratorio como se muestra y coloque la tuerca de fijación ⑨ sobre la anilla, apretándola suavemente a mano

FR: Montez le support mural du détecteur sur la rotule de fixation comme montré, et assemblez l'écrou de serrage ⑨ sur la vis de serrage de la rotule. Serrez ensuite légèrement l'écrou de serrage à la main, sans le bloquer

NL: Monteer de detector muurbeugel op de swivel beugel en schroef de blokkeermoer ⑨ op de swivel ring. Draai de blokkeermoer manueel aan en let op dat deze niet te vast aangedraaid wordt

11

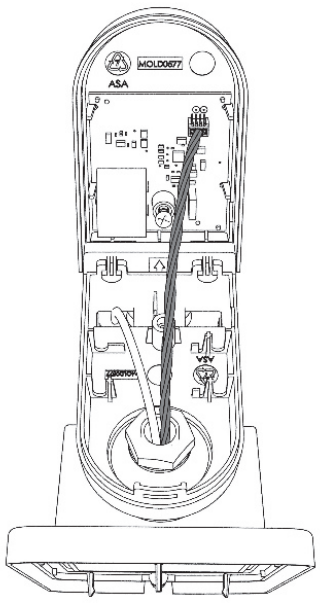

Fig. 8

EN: Insert the external wiring* and solar cable connector** from the top of the swivel bracket down through the lock screw

IT: Inserire il cablaggio* e il cavo di connessione del pannello solare** dalla parte superiore dello snodo attraverso la vite di blocco

ES: Inserte el cable* y el cable conector solar** desde la parte superior del Brazo giratorio hacia abajo a través del tornillo de fijación

FR: Insérez le câble* et le connecteur solaire** depuis le haut de la rotule de fixation et le descendre dans la vis de serrage

NL: Plaats de externe kabel *en de zonnecel kabel met connector** in de opening door de blokkeer schroef op de bovenzijde van de swivel beugel

12

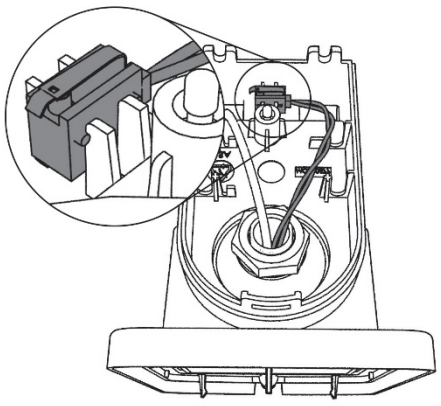

Fig. 9

EN: Install the tamper switch on the placeholder on the swivel bracket (make sure the lever points upward) and insert the tamper cable through the lock screw, if a tamper alert is required

IT: Installare l'interruttore tamper nell'apposito alloggiamento all'interno dello snodo (assicurarsi che la leva di attivazione del tamper sia rivolta verso l'alto) e far passare il cavo del tamper attraverso la vite di blocco dello snodo

ES: Instale el interruptor de Tamper en su soporte del Brazo giratorio (compruebe que el fleje metálico está hacia arriba) e inserte el cable del tamper a través del tornillo de fijación, si se requiere supervisión de Tamper

FR: Installez le switch d'autoprotection à l'emplacement prévu de la rotule (patte métallique vers le haut) et insérez le câble d'autoprotection dans la vis de serrage, si vous souhaitez utiliser l'autoprotection

NL: Monteer de sabotageschakelaar in de plaatshouder van de swivel beugel (let op dat de pijl naar boven wijst) en plaats de sabotage kabel door de blokkeermoer, als een sabotage melding vereist is

13

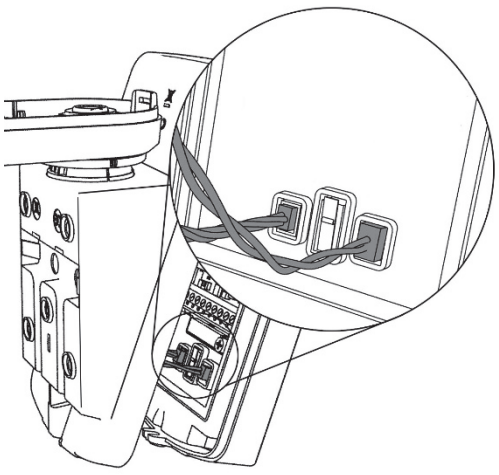

Fig. 10

EN: Remove the jumper from the tamper connector on the detector and connect the tamper cable ⑩, if a tamper alert is required. Then, connect the solar cable connector on the detector**

Caution! When using the solar swivel bracket, do not remove the three CR123 batteries from the Beyond detector.

IT: Rimuovere il ponticello dal connettore tamper del rivelatore e connettere il cavo dell'interruttore tamper ⑩, se richiesta la protezione contro le manomissioni. Successivamente, collegare il cavo di connessione del pannello solare al rivelatore**

Attenzione! Quando si utilizza lo snodo con il pannello solare, le tre batterie CR123 dal rilevatore Beyond non vanno rimosse.

ES: Retire el Puente del conector de Tamper del detector y conecte el cable del Tamper ⑩, si se requiere supervisión de Tamper. Después, conecte el cable conector solar al detector**

¡**Atención!** Cuando utilice el Brazo Solar Giratorio, no retire las tres baterías CR123 del detector Beyond.

FR: Enlevez le jumper du connecteur d'autoprotection du détecteur, et connectez le câble d'autoprotection ⑩, si vous souhaitez utiliser l'autoprotection. Ensuite, connectez le connecteur solaire au détecteur**

Attention ! Lorsque vous utilisez la rotule de fixation solaire, vous ne devez pas retirer les 3 piles CR123 du détecteur Beyond.

NL: Verwijder de jumper van de sabotage connector op de detector en verbind de sabotage kabel ⑩, als een sabotage melding vereist is. Koppel hierna de zonnecel kabel met connector aan de detector**

Opgelet ! Wanneer u gebruik maakt van de zonnecel beugel mag u de 3 CR123 batterijen niet verwijderen uit de Beyond detector.

14

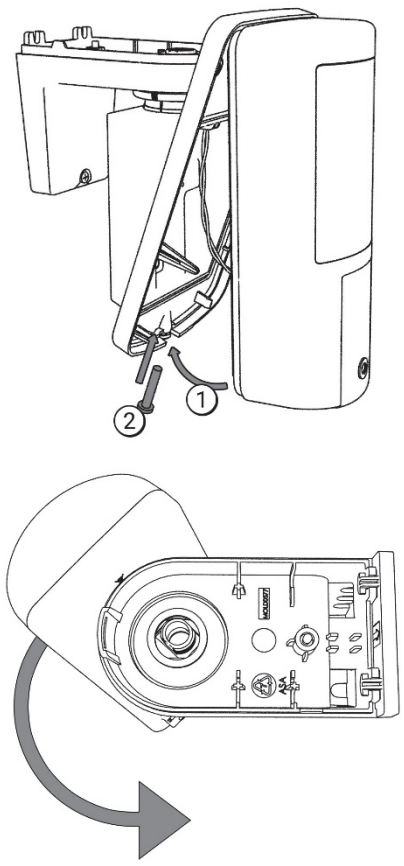

Fig. 11

EN: Mount the detector on the detector wall bracket and secure with screw, then adjust the detector on the horizontal axis and fasten the locking nut to lock the detector

IT: Rimontare il coperchio del rivelatore sulla base e bloccarlo con l'apposita vite, quindi regolare orizzontalmente il rivelatore e stringere il dado di blocco per bloccare il rivelatore

ES: Monte el detector en el Brazo de pared y ciérrelo utilizando el tornillo, después ajuste el detector en el eje horizontal y apriete la tuerca de bloqueo para fijar el detector

FR: Montez le détecteur sur son support et fermez-le avec la vis. Ajustez ensuite le détecteur sur l'axe horizontale et vissez l'écrou de serrage pour verrouiller le détecteur

NL: Monteer de detector op de muurbeugel en vergrendel met een schroef, regel deze af via de horizontale as en draai de blokkeerschroef aan om de detector vast te zetten

15

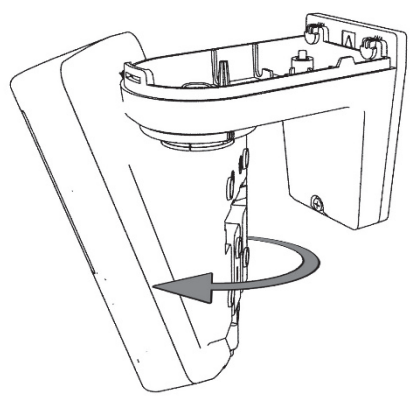

Fig. 12

EN: Loosen enough to be able to tighten the locking nut ⑨ to adjust the detector on the vertical axis according to the required angle (see table)

IT: Allentare la vite di blocco ⑨ quanto basta per regolare il rivelatore verticalmente in funzione dell'inclinazione necessaria (vedere la tabella)

ES: Afloje lo suficiente para poder apretar la tuerca de bloqueo ⑨ para ajustar el detector en el eje vertical de acuerdo al ángulo requerido (ver tabla)

FR: Desserrez suffisamment l'écrou de serrage ⑨ pour ajuster le positionnement du détecteur (voir le tableau suivant pour déterminer la couverture selon l'inclinaison)

NL: Draai de blokkeermoer ⑨ los zodat de detector kan bewegen en regel de detector af via de verticale as volgens de vereiste hoek (zie tabel)

Mounting height [m] / Altezza di montaggio [m]/ Altura de montaje [m] / Hauteur de montage [m] / Montage hoogte [m]	Swivel Angle [°] / Angolo snodo [°] / Ángulo de giro [°] / Angle de la rotule [°] / Swivel hoek [°]	Distance [m] / distanza [m] / Distancia [m] / Distance [m] / Afstand [m]
1.8	0	10
	5	7
	10	5
2.2 (optimal)	0	12
	5	8
	10	6
2.5 – 2.7	0	N/A
	5	10
	10	7

16

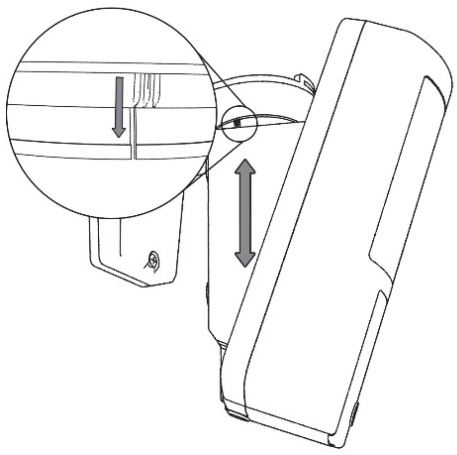

Fig. 13

EN: When the two markings are aligned, the swivel angle is 0°. Movement in either vertical direction of: 1 increment provides swivel angle of 5°; 2 increments provides swivel angle of 10°

IT: Quando i due riferimenti sono allineati, l'angolo dello snodo è 0°. Muovendo verticalmente lo snodo di uno scatto l'angolo dello stesso diventa 5° e muovendolo di 2 scatti diventa di 10°

ES: Cuando las dos marcas están alineadas, el ángulo de giro es 0°. Un movimiento vertical, en cualquier sentido, de: 1 incremento varía el ángulo en 5°; 2 incrementos varía el ángulo en 10°

FR: Quand les 2 marques sont alignées, l'angle de la rotule est de 0°. Un mouvement d'un cran correspond à une inclinaison de 5°. 2 crans correspondent à un angle de 10°

NL: Wanneer de twee markeringen uitgelijnd zijn, is de swivel hoek 0°. Verplaatsen in vertical richting van : 1 stap geeft een swivel hoek van 5°; 2 stappen geeft een swivel hoek van 10°

17

EN: Perform a walk-test (see the Detector's Installation Instructions)

IT: Effettuare una prova di movimento (*vedere le Istruzioni di Installazione del Rivelatore*)

ES: Realice una prueba de paseoPerform a walk-test (véase *Instrucciones de Installación del Detector*)

FR: Réalisez un test de marche (*voir le manuel d'installation du détecteur*)

NL: Voer een looptest uit (zie de detector's installatie instructies).

18

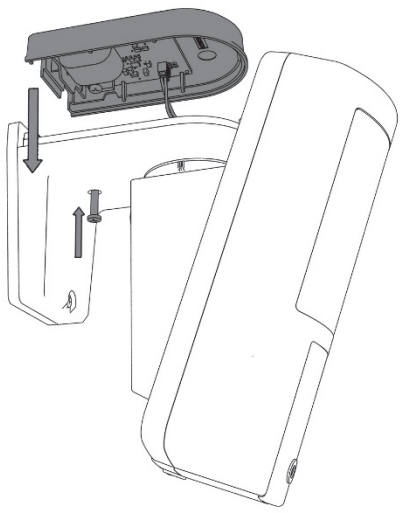

Fig. 14

EN: Once the installation is complete, attach the solar cable connector to the bracket cover ⑫** and fasten the screw to lock the cover

IT: Non appena l'installazione è stata terminata, collegare il connettore del pannello solare al coperchio ⑫** e stringere la vite per bloccarlo

ES: Una vez que la instalación se ha completado, una el cable conector solar a la tapa del brazo ⑫** y ajuste el tornillo para fijar la tapa

FR: Une fois l'installation terminée, connectez le connecteur solaire au couvercle de la rotule⑫** et fixez le en serrant la vis

NL: Zodra de installatie voltooid is, kan u de zonnecel kabel connector aansluiten op de beugel cover ⑫** en draai de schroef vast om de kap te vergrendelen

* Not applicable for wireless model / Non applicabile al modello radio / No aplicable a modelo inalámbrico / Non applicable pour le modèle sans fil de détecteur / Niet beschibaar op het draadloze model.

** Applicable only for solar swivel bracket / Applicabile solo al coperchio dello snodo comprensivo di pannello solare / Aplicable sólo para el Brazo Solar Giratorio / Applicable uniquement pour la rotule solaire / Enkel bruikbaar met de zonnecel swivel beugel

EN

Caution! To ensure good solar battery charge, the solar panel must always be kept clean.

IT

Attenzione! Per garantire una buona carica della batteria solare, il pannello solare deve essere sempre tenuto pulito.

ES

¡Precaución! Para garantizar una buena carga de la batería solar, el panel solar siempre debe mantenerse limpio.

FR

Attention ! Pour assurer une bonne recharge de la batterie via le capteur solaire, le capteur solaire doit toujours être maintenu propre.

NL

Opgelet ! Voor het correct opladen van de zonnecel batterij te garanderen dient u het zonnepaneel altijd proper te houden.

Ordering Information / Informazioni sull'ordine / Información para pedidos / Information de commande / Bestelinformatie

RA350S	180◎ Swivel for Beyond Outdoor detector / snodo 180° per Beyond rilevatore esterno / Brazo Giratorio 180º para detector Beyond™ de Exterior / Rotule de fixation 180° pour le détecteur extérieur Beyond / 180◎ Swivel voor de Beyond buitendetector

RED Compliance Statement:

Hereby, RISCO Group declares that this equipment is in compliance with the essential requirements and other relevant provisions of Directive 2014/53/EU. For the CE Declaration of Conformity please refer to our website: www.riscogroup.com.

Dichiarazione di Conformità RED:

La sottoscritta RISCO Group, dichiara sotto la propria responsabilità che questo prodotto è conforme ai requisiti essenziali e alle altre rilevanti disposizioni della Direttiva Europea 2014/53/EU. Per le Dichiarazioni di Conformità CE, visitate il nostro sito web: www.riscogroup.com.

Declaración de Conformidad RED :

Por la presente, RISCO Group declara que este equipo cumple con los requisitos esenciales y otras disposiciones relevantes de la Directiva 2014/53/EU. Para la Declaración de Conformidad CE, por favor diríjase a nuestra web: www.riscogroup.com.

Rapport de Conformité de RED:

Par la présente, RISCO Group, déclare cet équipement est en conformité aux conditions essentielles et à d'autres dispositions appropriées de la directive 2014/53/EU.
Vous pouvez trouver la copie complète de la déclaration de conformité à la directive 2014/53/EU sur notre site web, à l'adresse suivante : www.riscogroup.com.

RED Compliance Statement:

RISCO Group bevestigt dat dit product in lijn is met de essentieel verplichtingen en andere belangrijke clausules van de 2014/53/EU Directieven. Voor de conformiteit verklaring zie onze website: www.riscogroup.com

Standard Limited Product Warranty ("Limited Warranty")

RISCO Ltd. ("**RISCO**") guarantee RISCO's hardware products ("**Products**") to be free from defects in materials and workmanship when used and stored under normal conditions and in accordance with the instructions for use supplied by RISCO, for a period of (i) 24 months from the date of delivery of the Product (the "**Warranty Period**"). This Limited Warranty covers the Product only within the country where the Product was originally purchased and only covers Products purchased as new.

Contact with customers only. This Limited Warranty is solely for the benefit of customers who purchased the Products directly from RISCO or from an authorized distributor of RISCO. RISCO does not warrant the Product to consumers and nothing in this Warranty obligates RISCO to accept Product returns directly from end users who purchased the Products for their own use from RISCO's customer or from any installer of RISCO, or otherwise provide warranty or other services to any such end user directly. RISCO's authorized distributor or installer shall handle all interactions with its end users in connection with this Limited Warranty. RISCO's authorized distributor or installer shall make no warranties, representations, guarantees or statements to its end users or other third parties that suggest that RISCO has any warranty or service obligation to, or any contractual privy with, any recipient of a Product.

Remedies. In the event that a material defect in a Product is discovered and reported to RISCO during the Warranty Period, RISCO shall accept return of the defective Product in accordance with the below RMA procedure and, at its option, either (i) repair or have repaired the defective Product, or (ii) provide a replacement product to the customer.

Return Material Authorization. In the event that you need to return your Product for repair or replacement, RISCO will provide you with a Return Merchandise Authorization Number (RMA#) as well as return instructions. Do not return your Product without prior approval from RISCO. Any Product returned without a valid, unique RMA# will be refused and returned to the sender at the sender's expense. The returned Product must be accompanied with a detailed description of the defect discovered ("**Defect Description**") and must otherwise follow RISCO's then-current RMA procedure published in RISCO's website at www.riscogroup.com in connection with any such return. If RISCO determines in its reasonable discretion that any Product returned by customer conforms to the applicable warranty ("**Non-Defective Product**"), RISCO will notify the customer of such determination and will return the applicable Product to customer at customer's expense. In addition, RISCO may propose and assess customer a charge for testing and examination of Non-Defective Product.

Entire Liability. The repair or replacement of Products in accordance with this Limited Warranty shall be RISCO's entire liability and customer's sole and exclusive remedy in case a material defect in a Product is discovered and reported as required herein. RISCO's obligation and this Limited Warranty are contingent upon the full payment by customer for such Product and upon a proven weekly testing and examination of the Product functionality.

Limitations. This Limited Warranty is the only warranty made by RISCO with respect to the Products. The warranty is not transferable to any third party. To the maximum extent permitted by applicable law, this Limited Warranty shall not apply and will be void if: (i) the conditions set forth above are not met (including, but not limited to, full payment by customer for the Product and a proven weekly testing and examination of the Product functionality); (ii) if the Products or any part or component thereof: (a) have been subjected to improper operation or installation; (b) have been subject to neglect, abuse, willful damage, abnormal working conditions, failure to follow RISCO's instructions (whether oral or in writing); (c) have been misused, altered, modified or repaired without RISCO's written approval or combined with, or installed on products, or equipment of the customer or of any third party; (d) have been damaged by any factor beyond RISCO's reasonable control such as, but not limited to, power failure, electric power surges, or unsuitable third party components and the interaction of software therewith or (e) any failure or delay in the performance of the Product attributable to any means of communication provided by any third party service provider, including, but not limited to, GSM interruptions, lack of or internet outage and/or telephony failure. BATTERIES ARE EXPLICITLY EXCLUDED FROM THE WARRANTY AND RISCO SHALL NOT BE HELD RESPONSIBLE OR LIABLE IN RELATION THERETO, AND THE ONLY WARRANTY APPLICABLE THERETO, IF ANY, IS THE BATTERY MANUFACTURER'S WARRANTY. RISCO does not install or integrate the Product in the end user's security system and is therefore not responsible for and cannot guarantee the performance of the end user's security system which uses the Product or which the Product is a component of.

This Limited Warranty applies only to Products manufactured by or for RISCO. Further, this Limited Warranty does not apply to any software (including operating system) added to or provided with the Products or any third-party software, even if packaged or sold with the RISCO Product. Manufacturers, suppliers, or third parties other than RISCO may provide their own warranties, but RISCO, to the extent permitted by law and except as otherwise specifically set forth herein, provides its Products "AS IS". Software and applications distributed or made available by RISCO in conjunction with the Product (with or without the RISCO brand), including, but not limited to system software, as well as P2P services or any other service made available by RISCO in relation to the Product, are not covered under this Limited Warranty. Refer to the Terms of Service at: https://riscocloud.com/ELAS/WebUI/UserLogin/License for details of your rights and obligations with respect to the use of such applications, software or any service. RISCO does not represent that the Product may not be compromised or circumvented; that the Product will prevent any personal injury or property loss by burglary, robbery, fire or otherwise, or that the Product will in all cases provide adequate warning or protection. A properly installed and maintained alarm may only reduce the risk of a burglary, robbery or fire without warning, but it is not insurance or a guarantee that such will not occur or will not cause or lead to personal injury or property loss. CONSEQUENTLY, RISCO SHALL HAVE NO LIABILITY FOR ANY PERSONAL INJURY, PROPERTY DAMAGE OR OTHER LOSS BASED ON ANY CLAIM AT ALL INCLUDING A CLAIM THAT THE PRODUCT FAILED TO GIVE WARNING.

EXCEPT FOR THE WARRANTIES SET FORTH HEREIN, RISCO AND ITS LICENSORS HEREBY DISCLAIM ALL EXPRESS, IMPLIED OR STATUTORY, REPRESENTATIONS, WARRANTIES, GUARANTEES, AND CONDITIONS WITH REGARD TO THE PRODUCTS, INCLUDING BUT NOT LIMITED TO ANY REPRESENTATIONS, WARRANTIES, GUARANTEES, AND CONDITIONS OF MERCHANTABILITY, FITNESS FOR A PARTICULAR PURPOSE, TITLE AND WARRANTIES AGAINST HIDDEN OR LATENT DEFECTS, TO THE EXTENT PERMITTED BY LAW. WITHOUT LIMITING THE GENERALITY OF THE FOREGOING, RISCO AND ITS LICENSORS DO NOT REPRESENT OR WARRANT THAT: (I) THE OPERATION OR USE OF THE PRODUCT WILL BE TIMELY, SECURE, UNINTERRUPTED OR ERROR-FREE; (ii) THAT ANY FILES, CONTENT OR INFORMATION OF ANY KIND THAT MAY BE ACCESSED THROUGH THE PRODUCT SHALL REMAIN SECURED OR NON DAMAGED. CUSTOMER ACKNOWLEDGES THAT NEITHER RISCO NOR ITS LICENSORS CONTROL THE TRANSFER OF DATA OVER COMMUNICATIONS FACILITIES, INCLUDING THE INTERNET, GSM OR OTHER MEANS OF COMMUNICATIONS AND THAT RISCO'S PRODUCTS, MAY BE SUBJECT TO LIMITATIONS, DELAYS, AND OTHER PROBLEMS INHERENT IN THE USE OF SUCH MEANS OF COMMUNICATIONS. RISCO IS NOT RESPONSIBLE FOR ANY DELAYS, DELIVERY FAILURES, OR OTHER DAMAGE RESULTING FROM SUCH PROBLEMS. RISCO WARRANTS THAT ITS PRODUCTS DO NOT, TO THE BEST OF ITS KNOWLEDGE, INFRINGE UPON ANY PATENT, COPYRIGHT, TRADEMARK, TRADE SECRET OR OTHER INTELLECTUAL PROPERTY RIGHT IN ANY EVENT RISCO SHALL NOT BE LIABLE FOR ANY AMOUNTS REPRESENTING LOST REVENUES OR PROFITS, PUNITIVE DAMAGES, OR FOR ANY OTHER INDIRECT, SPECIAL, INCIDENTAL, OR CONSEQUENTIAL DAMAGES, EVEN IF THEY WERE FORESEEABLE OR RISCO HAS BEEN INFORMED OF THEIR POTENTIAL.

© RISCO Group 09/2018 5IN2460 G