Walk-through Metal Detector

User's Manual

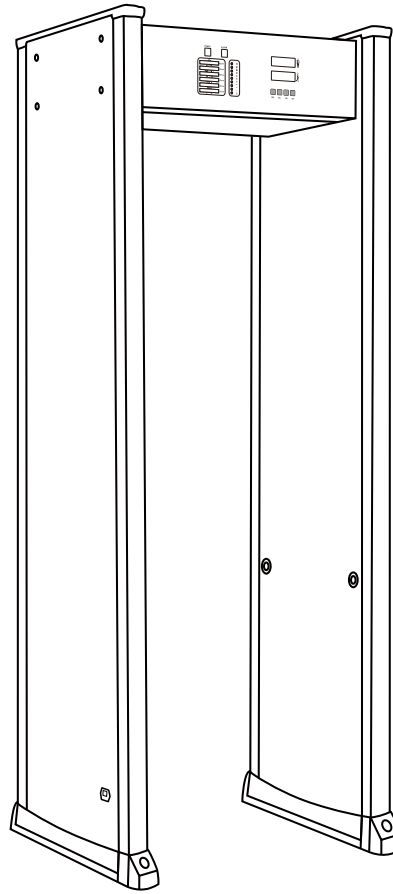

V4.0

[Table of Contents]

Precautions---------- 1

Product introduction---------- 2

Suitable places---------- 3

Performance and characteristics---------- 3

Installation conditions---------- 4

Installation specification---------- 5

Display specification---------- 6

Operating specification----------7

Detection adjustment---------- 13

Common problem handling---------- 14

Standard compliance---------- 15

Technical parameter---------- 16

Inspection report---------- 17

Packing list ---------- 17

“Green channel” after-sales service system---------- 18

Maintenance document---------- 18

Disclaimer---------- 18

Note: Please read this Manual carefully before operation.

[Precautions]

I. The Walk-through Metal Detector (WTMD) is only available for indoor use. Outdoor installation is not allowed, otherwise rainproof / sunproof facilities such as awnings shall be used.

II. The Walk-through Metal Detector (WTMD) shall not be installed at high temperature and moisture places.

III. The Walk-through Metal Detector (WTMD) shall be installed at flat and vibration-free places for fear of waggling and causing false alarms.

IV. The Walk-through Metal Detector (WTMD) can only reach the best inspection effect after the 1 min self-inspection.

V. Persons shall be inspected one by one according to the stringent stand-by or alarm time settings (more than 1s). Crowding around the Walk-through Metal Detector (WTMD) is not allowed for fear of infrared sensation interference.

VI. Please DO NOT knock on or hit the WTMD during inspection for fear of false alarms or even damage.

VII. Dirt or dust shall be removed carefully with a cloth dipped with a little water or alcohol. Direct rinse with water or other chemical solvents is not allowed.

VIII. The equipment shall not be opened without permission for fear of high voltage and other man-made accidents.

IX. The metal detection & Walk-through Metal Detector (WTMD) has been provided with a guarantee. The maintenance is free within the guarantee period as specified in the guarantee.

[Product introduction]

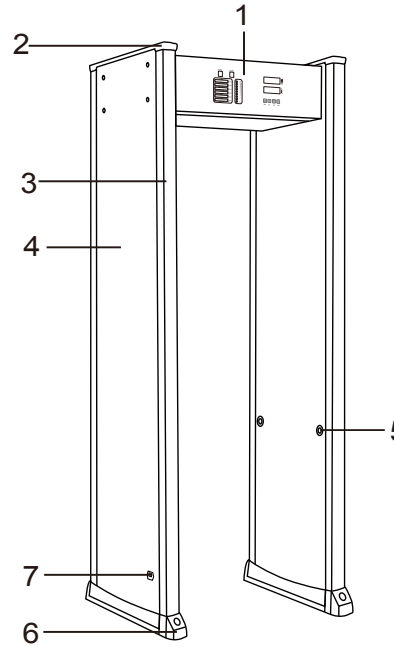

1. Main case **2.** Top cover **3.** Aluminum strip **4.** Door plate
5. Infrared sensor **6.** Stabilization base **7.** Power supply socket

Stabilizer base

Power supply socket

Cable

Walk-through Metal Detector is a kind of fixed installed detection equipment. It is also called metal detection door and can be called as security door for short. It is mainly used to detect metal objects hidden on human body. When the personnel to be check are walking through the security door, if the metal brought by the personnel exceeds the preset parameter value, the security door will send alarm sound immediately and display alarm location so that the security personnel can timely find out prohibited metal articles.

As one of the product of highest technical content, our product feature in quick response, accurate detection, high sensitivity and strong anti-interference, so it can meet the needs by users from all industries.

[Suitable places]

I. **Suitable for law enforcement agencies:** Including public security departments, procuratorates, courts, prisons, reformatories and penitentiaries etc. requiring forbidden metallic article inspection.

II. **Suitable for public places:** Including public places such as gymnasiums /stadiums, recreation places, airports, customs authorities, exhibition halls and museums etc. requiring entrance safety inspection.

III. **Suitable for manufacturing enterprises:** Including electronic product, hardware, coinage and jewelry manufacturing enterprises etc. requiring safety inspection for fear of loss of valuables.
(Hand metal detectors are suitable for all the above mentioned places and therefore are necessary auxiliary inspection equipment for inspectors).

[Performance and characteristics]

I. **Accurate localization:** Six overlapped netlike detection locations, double side emission, double side reception, accurate localization of detected articles and visual display of objects.

II. **Multi-location alarming:** More than one metal position can be localized at the same time.

III. **Microprogramming technology:** The electromagnetic wave used for scanning can be generated by the control circuit of microcomputer and the scanning rate can be controlled accurately. The program can be set via the control panel according to the requirement in order to ensure flexible, reliable and stable sensitivity setting.

IV. **Compound circuit design:** The infrared scattering device with quick sensing and automatic computer identification functions can help to reduce false alarms and alarm failures. The number alarms and passed persons can be recorded automatically.

V. **Digital pulse technology:** A digital signal processing and filtering system with perfect EMI resistance is provided.

VI. **Adjustable sensitivity:** Each detection zone has been provided with 300 sensitivity levels (0 ~ 299), and therefore the location can be adjusted to an available sensitivity according to the detection requirement (the higher the set value is, the higher the sensitivity will be). The integral sensitivity can be realized through adjusting the six locations at the same time.

VII. **Password setting:** Change of parameters regarding program and sensitivity etc. is only allowed after the password is entered correctly. The password consists of four figures set freely by users (**Note**: The passwords with regard to setting items of the system are unchangeable).

VIII. **Serial port communication:** Data communication interfaces are reserved for online operation.

IX. **Modular design:** The adopted modular design realizes easy installation and troubleshooting.

X . **High impact resistance design / manufacturing:** High impact / bump resistance when no one passes through. The stand-by or normal operation modes can be kept in good conditions regardless of any external factor.

XI. **Magnetic field emission technology:** The product can meet the popular international safety standard and the weak magnetic field technology has been adopted and therefore does no harm to pacemaker users, pregnant women, floppy disks, films and videotapes etc.

[Installation conditions]

I. Stationary metal articles

The Walk-through Metal Detector (WTMD) shall be at least 50cm away from stationary or fixed big metal articles, otherwise false alarms will be caused.

II. Movable metal articles

Movable big metal articles shall be 1 ~ 2m away from the Walk-through Metal Detector (WTMD) for fear of false alarms, especially when the Walk-through Metal Detector (WTMD) is to be installed at factory gates or bottom floors of buildings, the affection of rolling gates, iron security doors and grid doors shall be considered. The bigger the area of different metal articles is, the farther the distance between the Walk-through Metal Detector (WTMD) and them shall become.

III. Floor vibration

The floor shall be flat and firm in order to prevent the installed Walk-through Metal Detector (WTMD) from waggling due to walking people or moving metal articles or causing unnecessary false alarms.

IV. Electromagnetic radiation and interference

Since the double side emission / reception technology is adopted for the Walk-through Metal Detector (WTMD), any electromagnetic interference and radiation source shall be kept away from both sides. The suggested distance is 1 ~ 2m.

Possible sources with electromagnetic interference and radiation are:

electrical equipment control box, RF equipment, computer and the peripheral equipment, video monitor, high-power motor, high-power transformer, AC power line, thyristor control circuit (switching mode high power supply , inverter welder), engine, machine with motor and daylight lamp with demode electronic ballast.

V. Notes when two or more Walk-through Metal Detector (WTMD)s of different series are used

When two or more Walk-through Metal Detector (WTMD)s are used together, interference will be caused, which differs with the distance among WTMD and the selected working frequency; When installing two or more walk through metal detector(WTMD), the automatic frequency setting function shall be enabled and the machines, started in order. The frequency settings shall be different from each other, and the distance between Walk-through Metal Detector (WTMD)s shall be not less than 50cm.

VI. Installation at places with wind is not allowed

The WTMD will waggle slightly in case of wind, causing false alarm during normal operation.

[Installation specification]

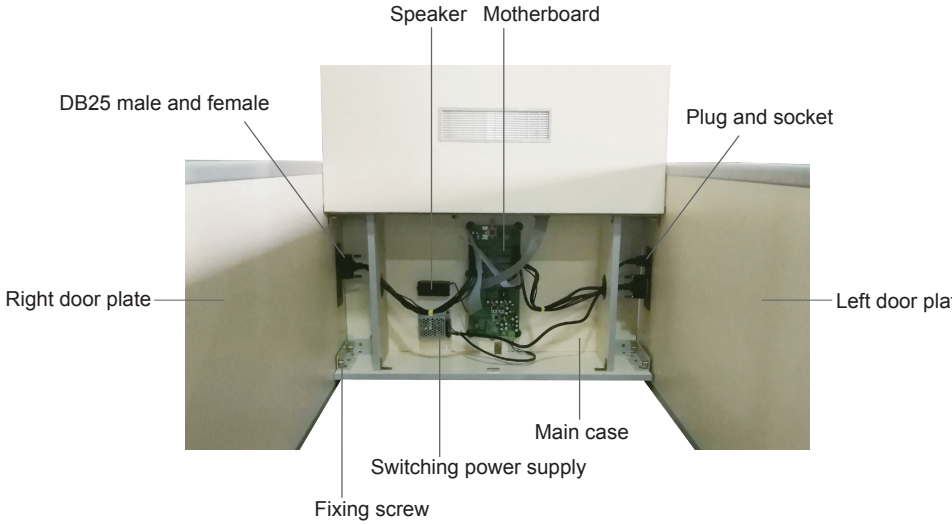

I. Installation instruction

1. Remove the packages of the main case and door plates.
2. Face the panel of the main case down, put the right and left door plates (as shown in the figure) at the specified places and put the fitting box aside.
3. Put the right / left door plates and main case close to each other erectly and fix them together with 8 fixing screws of the fitting box with an allen wrench.
4. Insert the DB25 plugs of the main case into the corresponding DB25 sockets of the right / left door plates separately.
5. Insert the 3-pin plug of the external power cable of the fitting box into the socket being at the bottom of the outside of the door plate (Note: The power supply is only connected when the socket used for the external power cable and that used for the main case cable are set at the same door plate).

II. Direction for use

1. After the Walk-through Metal Detector (WTMD) is installed, keep pressing “RES” of the keyboard until the machine is started and the panel lights up;
2. The started Walk-through Metal Detector (WTMD) will perform self-inspection and the item displayed on the panel will change and twinkle. When the displayed item stops twinkling, both the number of passed persons and alarms will be “0”, meaning that the startup operation finishes.

Note: The Walk-through Metal Detector (WTMD) is available for customized settings based on different conditions and requirements, see the “Operating specification” for the detailed setting.

[Display specification]

I. Panel specification

1. The left side of the panel is zone panel. The big green light at the top is the power indicator light, and the big red light next to it is the alarm indicator light. The small red lights below the power indicator light are used for location indicating. The vertical LED lights at the low right side are alarming intensity indicator lights.

2. The right side of the panel is the keypad, where the first row shows the number of alarms within 0 ~ 9999, the second row shows the number of passed person within 0 ~ 9999 and the third row comprises of function keys i.e. “RES”, “SEL”, “ADJ” and “ENT” from the left to the right.

3. After the machine is started, the green power indicator light will be On when no any metal article passes through; the power indicator light will be Off when any metal article passes through and the red alarm / alarming intensity indicator lights will be On with warning tone. The bigger the metal is, the more the intensity indicator lights will appear. The location indicator lights of the panel match with 6 locations of the WTMD body (Location 1 ~ 6 from the top down). When an alarm is triggered, the bright location indicator lights will show the metal location accurately.

[Operating specification]

I. Key specification:

1. The "RES" has two functions for the actual operation:

(1) On / Off : The system can be started up by pressing it for more than 1s and shut down by pressing it for more than 3s.

(2) Reset: The system can be reset by pressing it for 0.5 ~ 3s at any interface.

2. The "SEL" has two functions for the actual operation:

(1) Selection: For example, when the sensitivity is adjusted, all locations can be switched;

(2) Digit switching: For example, when the password is entered, different digits can be switched.

3. The "ADJ" has two functions for the actual operation:

(1) Number modification: For example, when the password is entered, the numbers can be modified;

(2) Digit switching: For example, when the sensitivity is adjusted, the sensitivity digits can be switched.

4. The "ENT" has three functions for the actual operation:

(1) Confirmation: When a menu is selected and confirmed, the password input interface of the secondary interface can be shown if the key of the main interface is pressed after startup.

(2) Setting saving: The modified menu or parameter can be saved.

(3) Number modification: When the sensitivity and alarm are set, the numbers can be modified.

II. Basic operation

1. **Startup:** The system under the shutdown mode can be started by pressing “RES” for more than 1s. The system performs the signal self-inspection during the startup. If the inspection meets the requirement, a “0” will be shown, if the inspection fails to meet the requirement, an “E” will be shown. After the inspection finishes and the frequency setting is OK, the main interface will be shown as in Fig. 1:

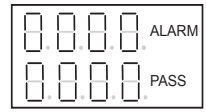

Fig. 1

2. **Shutdown:** The system under the operating mode can be shut down after “RES” has been pressed for more than 3s and the ring has been triggered.

3. **Reset:** Under the operating mode, the system can be reset by pressing “RES” at any interface for 0.5 ~ 3s, and at this time the interface will go back to the initial one as shown when the machine is started and the number of passed persons and alarms will be reset.

4. **Check of program version number:** As shown in Fig. 2, the program version number will be shown on the screen when “SEL” is pressed twice continuously at the main interface. The main interface will be recovered when “SEL” is pressed again.

Fig. 2

III. Functional parameter setting

The parameter setting block diagram is shown as below:

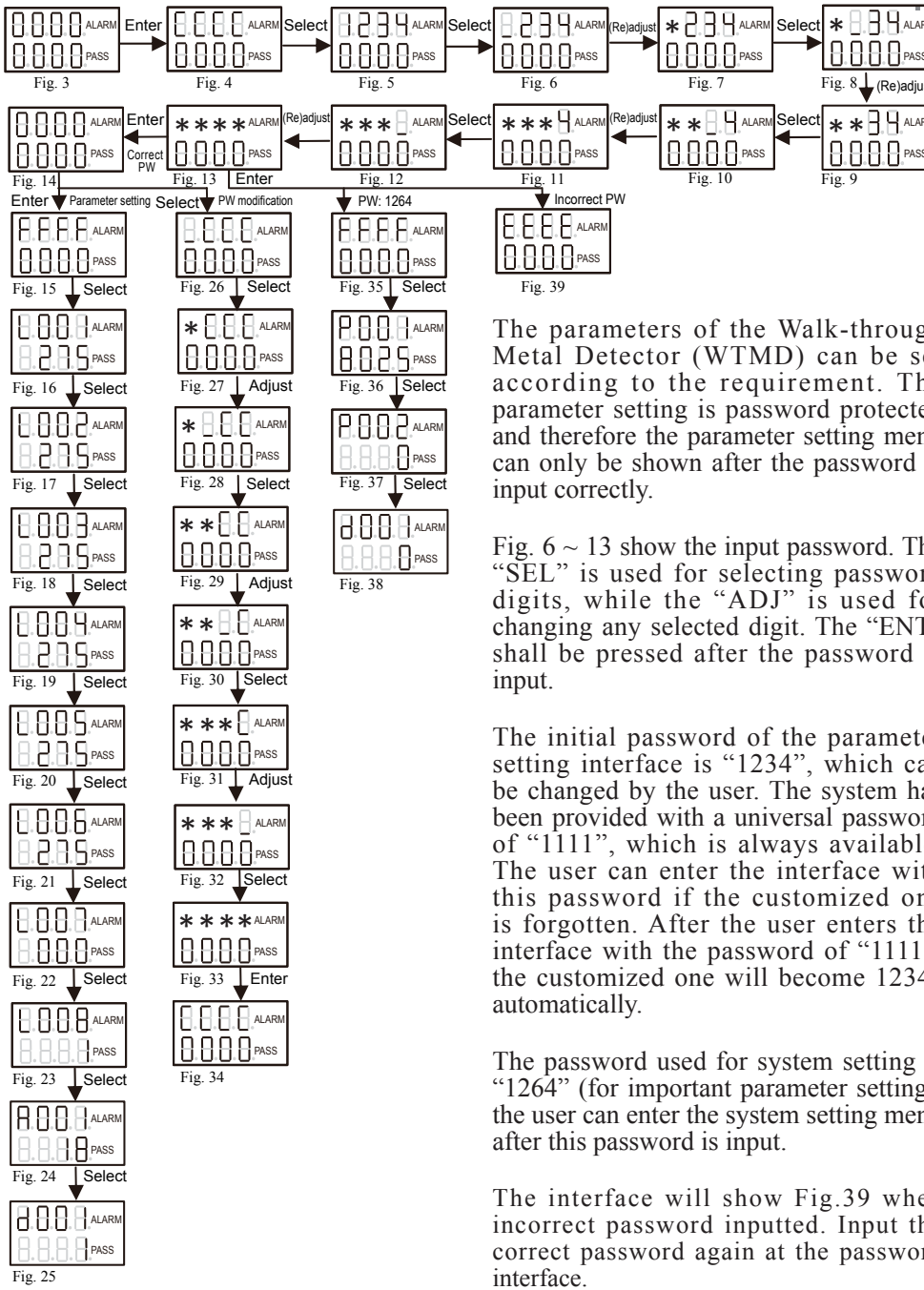

The parameters of the Walk-through Metal Detector (WTMD) can be set according to the requirement. The parameter setting is password protected and therefore the parameter setting menu can only be shown after the password is input correctly.

Fig. 6 ~ 13 show the input password. The "SEL" is used for selecting password digits, while the "ADJ" is used for changing any selected digit. The "ENT" shall be pressed after the password is input.

The initial password of the parameter setting interface is "1234", which can be changed by the user. The system has been provided with a universal password of "1111", which is always available. The user can enter the interface with this password if the customized one is forgotten. After the user enters the interface with the password of "1111", the customized one will become 1234" automatically.

The password used for system setting is "1264" (for important parameter setting), the user can enter the system setting menu after this password is input.

The interface will show Fig.39 when incorrect password inputted. Input the correct password again at the password interface.

1. Password modification

(1) Input the correct password or “1111” and press “ENT” to show Fig. 14, then press “SEL” to enter the password modification menu, see Fig. 26.

(2) Press “SEL” to select password digits. The digit can be changed by pressing “ADJ” until the 4-digit password is set, see Fig. 33. The password will be modified successfully after “ENT” is pressed (The password is not saved in the system though modified successfully, save the set new password according to the “III 4 Save set parameter”).

(3) After the password is modified, see Fig. 34, the password input interface still exists (being equivalent to Fig. 5), the user can enter the setting menu after the correct password (modified) is input.

2. Sensitivity setting

Input the correct customized password or “1111” and press “ENT” to show Fig. 14. Press “ENT” to enter the parameter setting menu, see Fig. 15.

(1) Press “SEL” to select the submenu (L001 ~ L008). L001 ~ L006 refer to the sensitivity of zone 1~ 6. Taking L001 as an example, see Fig. 40 ~ 43, press “ADJ” to select the sensitivity digits. The selected digit can be changed by pressing “ENT”. After the sensitivity of zone 1 is set, press “SEL” to enter the sensitivity setting menu of zone 2.

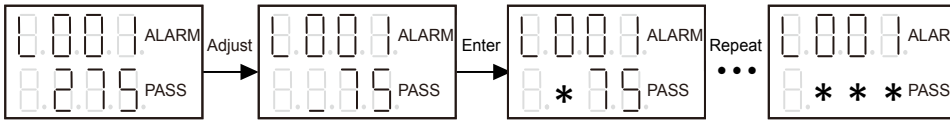

Fig. 40 Fig. 41 Fig. 42 Fig. 43

(2) The sensitivity from zone 1 to 6 can be set separately or set as the same one for the sake of convenience. L007 refers to all sensitivity values from zone 1 to 6, which can be set as the same one by specifying L007 as an non-zero value, e.g. when L007 is set as 150, then the sensitivity from zone 1 to 6 can be Level 150 after the setting is saved. If it is unnecessary to set the sensitivity as the same one, L007 must be set as 000.

(3) L008 refers to the multiple of the integral sensitivity. The “Once” or “50 times” can be selected. The switching between “Once” and “50 times” can be enabled by pressing “ADJ”. The “ENT” is unnecessary here. If “Once” is selected, the sensitivity will not change; If “50 times” is selected, the sensitivity will be reduced by 50 times.

Note: The adjustable levels with regard to sensitivity are restricted within Level 0 ~ 299. The higher the value is, the higher the sensitivity will become; The higher the multiple of is, the lower the sensitivity will become.

3. Alarm setting

Input the correct password or “1111” and press “ENT” to show Fig. 14, then press “SEL” to enter the alarm setting menu, see Fig. 15. Press “SEL” continuously to enter the ring tone setting menu (see Fig. 24), the last two digits of the lower row digital tube are shown, where the first one the ring tone (9 ring tones i.e. Ring Tone 1 ~ 9 are optional), the second digit means the volume (Volume 0 ~ 8 are optional, Volume 0 means mute). The “ADJ”and “ENT” are used for selecting digits and changing selected digit.

4. Set parameter saving

The parameter will become effective immediately after setting, however it is only available for current operation. When the machine is shutdown and started again, the operation of the system will enabled based upon the last saved parameter. Only those set parameter saved in the system are always effective.

Method for saving set parameters: After a parameter is set, press “ENT” in the interface showing “d001” (see Fig. 25), the parameter will be saved in the system. After the parameter is saved, the main interface will be shown automatically (see Fig. 1). The number of passed persons and alarms will be reset.

IV. System parameter setting

1. Manual frequency setting

Input the password of “1264” and press “ENT” to show Fig. 35. Press “SEL” to enter the manual frequency setting menu, see Fig. 36.

Press “ADJ” to select the frequency digit. The selected digit can be changed by pressing “ENT”.

The manual frequency setting, taking 1Hz as one stepping, is allowed within 7000 ~ 8999Hz. When the frequency is about 8000Hz, the system performs the best and the power consumption is the lowest.

Note: When the frequency is about 8000Hz, the system performs the best. Generally, the frequency shall be kept within 7350 ~ 8700Hz.

2. Automatic frequency setting after startup

“Automatic frequency setting after startup”: The system will check the frequencies of ambient machines automatically in order to set different frequency. When more than one WTMDs is used at the same time, the frequency of each one can be staggered automatically for fear of repeat and high mutual interference during the operation.

Setting method: Enter the interface as shown in Fig. 37. The automatic frequency setting after startup will be unavailable when the last digit of the lower row is “0” and available when “1”; The “ADJ” can be used for switching the last digit between “0” and ”1”. The final setting shall be saved in the system.

Note: When more than one WTMDs is to be used at the same time, just shut down them after the automatic frequency setting finishes and then start them in order. The frequency setting of one machine must be finished before the next one is started; Different frequencies shall match with different ring tones.

3. Set parameter saving or factory setting restoring

SEL “Save set parameters” or ”restore factory settings” in the interface showing “d001” (see Fig. 38).

0 --- Set parameter saving

When the last digit of the lower row is 0, just press “ENT”, the set “Frequency” and the parameter determining automatic frequency setting will be saved in the system, which will be available for the next startup.

1 --- Factory setting restoring

When the last digit of the lower row is 1, just press “ENT”, all factory settings will be restored and saved by the system.
The main interface will be shown again after the saving (Fig. 1). The number of passed persons and alarms will be reset.

[Detection adjustment]

I. The Walk-through Metal Detector (WTMD) can only meet the highest performance under stable conditions. Steps for checking the Walk-through Metal Detector (WTMD) for being used under stable conditions:

1. Check the installation position of the Walk-through Metal Detector (WTMD) for meeting the requirement of "installation condition".
2. The Walk-through Metal Detector (WTMD) shall not waggle after startup.
3. The alarm is not triggered when the tester without metal articles passes through the WTMD; The alarm is triggered when the tester with metal articles (e.g. keys) passes through the WTMD.
4. The Walk-through Metal Detector (WTMD) can be considered as being used under stable conditions when meeting the above items.

II. In order to prevent personal belongs such as rings, keys, buckles, leather shoes with metal parts etc. from affecting those metal articles required to be detected, the following adjustment steps shall be conducted:

1. Increase the sensitivity, the alarm shall be triggered when passing the WTMD with those metal article exceptions;
2. Decrease the sensitivity (within an appropriate range), pass the Walk-through Metal Detector (WTMD) again with those metal article exceptions until the sensitivity is just decreased to the level causing no alarms.

Note: If the sensitivity of one zone is required to be decreased, just adjust the relevant zone; If the sensitivity of the entire WTMD is required to be decrease, just set “All” as an non-zero value to realize the setting of all 6 zones or set the “Integral” as 50 times. After the above adjustment, those articles with the sizes being smaller than the sample will not trigger the alarm, while those with the sizes being bigger than the sample will be detected accurately.

III. Inspection rules of the Walk-through Metal Detector (WTMD)

1. A warning line being 50 cm away from the front / rear of the Walk-through Metal Detector (WTMD) shall be drawn in order to make the persons to be inspected pass one by one.
2. Before the persons to be inspected passes the WTMD, those carried metal articles such as keys, cell phone, iron trade mark articles, cigarette and coins etc. shall be put at a specified position. The above mentioned articles can be taken back after the inspection.
3. The persons to be inspected shall walk through the WTMD, normally one by one. Crowding, intended rush or ambling as well as impacting the door plate are not allowed.
4. For the WTMD inspection, the person shall be inspected after the last one passes the warning line without triggering the alarm. If an alarm is triggered, the person shall be inspected after the alarm tone stops.
5. A person passing through the Walk-through Metal Detector (WTMD) triggers the alarm means that metal articles are carried. The metal article location can be found according to the indication of the LED light bar (The bought “Hand metal detector” produced by our company can used together).
6. The person to be inspected shall not wear jewelries or clothes, caps and footwear with metallics for fear of affecting normal inspection of metal articles.

[Common problem handling]

I. Infrared sensor counting failure

1. Check both ends of the sensor leads in the main case for being correctly connected.
2. If both ends of the sensor leads are connected correctly, check the emission voltage of the infrared modules for being in good condition. Resistor R5 and R286 are emission ends. The voltage R5 / R286 and U2 / U36 connecting ends is approx. 2.5V. D2 and D13 are reception ends. When the infrared is not blocked, the voltage of the 3rd pin of D2 and D13 is close to 0V. When the infrared is blocked, the voltage of the 3rd is higher than 3V. If the voltage of the infrared module emission and reception ends is normal, check IC U21 of the main controller.
3. If one or a pair of the infrared module emission and reception ends does not work, the infrared tube shall be checked for being burnt or bad connection or the system for bad wiring.

II. False alarm

1. If frequent false alarm appear, check the installation conditions of the Walk-through Metal Detector (WTMD) for meeting the “Installation conditions”.
2. If the installation meets the “Installation conditions”, check the right / left door plates for being installed backwards.
3. If the door plates are installed correctly, try to decrease the sensitivity of all zones and check the false alarm for being handled.
4. If this problem is still not handled through decreasing sensitivity, check the voltage for being normal. Normal working voltage shall be 110 ~ 240V. False alarms might be caused if the voltage is lower than 110V (handling method: Try to buy an adjustable booster or a back-up UPS power supply).
5. If the working voltage is kept within the normal range, check the oscillation frequency for being normal. Stagger the interference by changing the frequency and the perform further tests.

III. Startup failure

1. If a startup failure appears, check the voltage for being kept within a normal range. If the supply voltage is lower than 90V, the machine will not be started up (Try to buy an adjustable booster).
2. If the voltage is kept within a normal range, check the input end of the switching supply. If no voltage is found, check the fuse for being burnt out. If the voltage is normal, check the output end voltage of the switching supply for being 12V. If the voltage is 12V, check the voltage values of the motherboard and MCU for being 5V and 3.6V respectively.

IV. Alarm failure

1. If an alarm failure occurs, check the alarming mode firstly. If the alarming mode is “With infrared”, the alarm is only available with infrared counting; If the alarming mode is “Without infrared”, check the oscillation signal for normal output.
2. If the alarm failure still exists though the oscillation signal is normal, the DC power values of the motherboard shall be checked for being +8V, -8V and +12V respectively with a multimeter.
3. If the DC power values of the motherboard are +8V, -8V and +12V, the reference voltage shall be checked for being 3.6V with a multimeter.
4. If the reference voltage is 3.6V, the 3rd-pin DC voltage of Q21 and Q25 of the motherboard shall be checked for being close to -8V and 0V respectively with a multimeter.

V. Wiring diagram of circuit board:

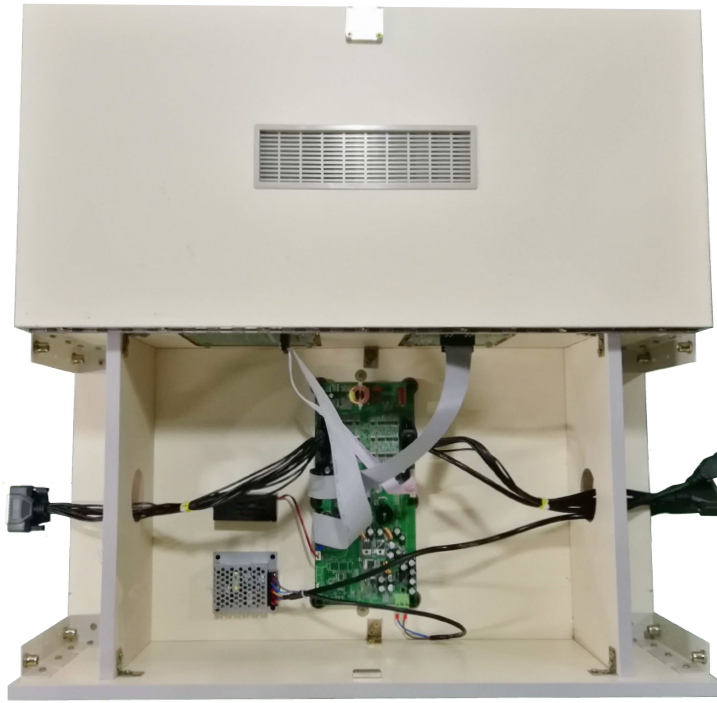

Mother Borad + Switch power supply + Zone LED PCB + Keyboard PCB + Speaker

[Standard compliance]

This product meets the Technical Code for GB15210-2003 Walk-through Metal Detector (WTMD).

[Technical parameter]

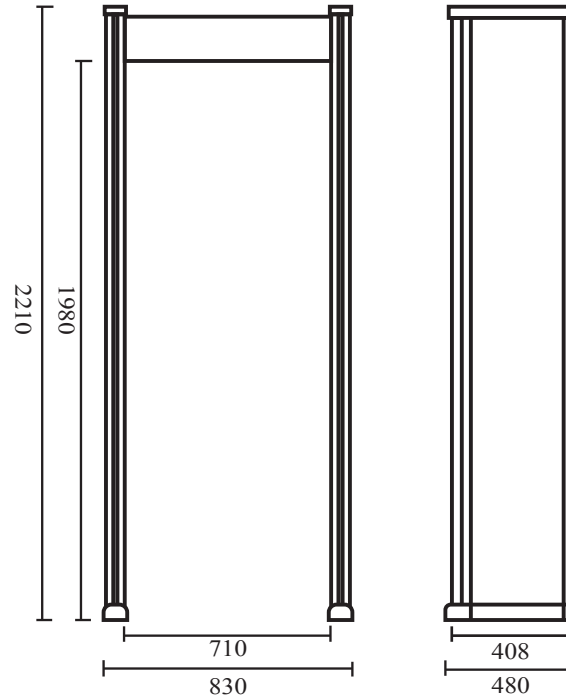

OPS: AC 100V ~ 240V 50 / 60Hz

Actual power consumption: < 12W

Signal freq.: 7000Hz ~ 8999Hz, adjustable

Operating ambient temperature: -20 ~ 45°C

Operating ambient humidity: ≤ 98%

Weight of entire packaged product: Approx: 70kg

Overall dimension: H 2210MM x W 830MM x D 480MM

Passage size: H 1980MM x W 710MM x D 408MM

Package size: Door plate: L 2235MM x W 505MM x H 155MM

Main case: L 750MM x W 240MM x H 375MM

[Inspection report]

Name	Walk-through Metal Detector (WTMD)	Model		Serial No.	
Insp. date		Insp. equipment		Aging time	

Functional inspection item:			
1. Infrared		4. Alarm	
2. Power supply		5. Key	
3. Display		6. Appearance	

Sensitivity inspection:				
Location	Sensitivity			
Loc. I	**265**	**235**	**200**	
Loc. II	**265**	**235**	**200**	
Loc. III	**265**	**235**	**200**	
Loc. IV	**265**	**235**	**200**	
Loc. V	**265**	**235**	**200**	
Loc. VI	**265**	**235**	**200**	
Detected article	**Ø20mm Steel ball**	**Ø30mm Steel ball**	**Ø40mm Steel ball**	
Package inspected		Product inspected		
Verified by:		**Inspected by:**		

[Packing list]

Specification	( )	8 sets of screws	( )
Cable	( )	Key	( )
5mm Allen wrench	( )		
Tested by:		**Inspected by:**	

[“Green channel” after-sales service system]

I. **Instant response:** 24h hotline support; Reply within 4h; Service providing within 24 ~ 48h.
II. **One-month guarantee for replacement:** Any product with quality problem confirmed by the quality inspection department of our company can be replaced within 1 month after the purchase date.
III. **Two-year guarantee for maintenance:** The maintenance of the entire machine and main parts, provided by our company and domestic local joint guaranty agencies, as specified in the guarantee, is free within one year and two years respectively.
IV. **Lifetime service:** The joint guaranty agencies established by our company provides lifetime services regarding technical advice, technical training, product technology upgrading etc.
V. **Regular inspection:** A regular inspection service will be provided after the product is purchased in order to keep stable operation of the equipment.
VI. **Customization:** The product can be designed and produced separately according to the actual situation and the user’s requirement.

[Maintenance document]

I. This document shall be kept carefully for the sake of maintenance.
II. This document will be considered as invalid without the signature and seal of specified agencies.
III. Three Guarantees and Acknowledgment without detailed information will be considered as invalid. Please check the Three Guarantees and Acknowledgment for being provided with correct and detailed information. The Three Guarantees and Acknowledgment shall be submitted to the dealer for the sake of providing services.
IV. Reissuance of this document due to loss is not allowed.

Guarantee Card

Model		Serial No.	
Purchase date		Tel	
Contact		Fax	
Company name			
Address			

Maintenance Record

Maintenance date	Maintenance record	Maintained by

[Disclaimer]

I. This specification, though prepared based on correct and detailed information, does not mean that no missing or incorrect explanation of any part will occur.
II. The software and hardware of this product are subject to change without notice.
III. Our company reserves the final right of interpretation of this specification.