Junction Box
Grade 3 Class II

20 (18+2) Way
Tampered
Junction Box

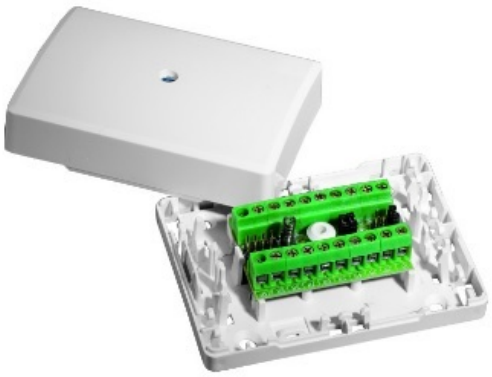

Features

ADIJB-G3C2-20-W

GRADE 3 CLASS II

Connections : Wire clamping Terminal Blocks

Opposing terminals linkable by shunt placement

TACT Tamper switch

Dimensions: 90mm x 65mm x 26mm

Max Current: 3A

Temperature Range: -40 to +50 °C

3 Years Warranty

UPC: 840049308213

PART #: ADIJB-G3C2-20-W

For more information contact your ADI sales person or visit us at www.adiglobal.com

Rev: June 23

Junction Box

ADIJB-G3C2-20-W

Installation

To install, connect the TMP terminals to the panel tamper circuit.
Place links over the corresponding header blocks to join opposing sides of the circuit board. For example, placing a link over the pins marked 5 will join the wiring attached to 5A & 5B. See the diagram below for more information:

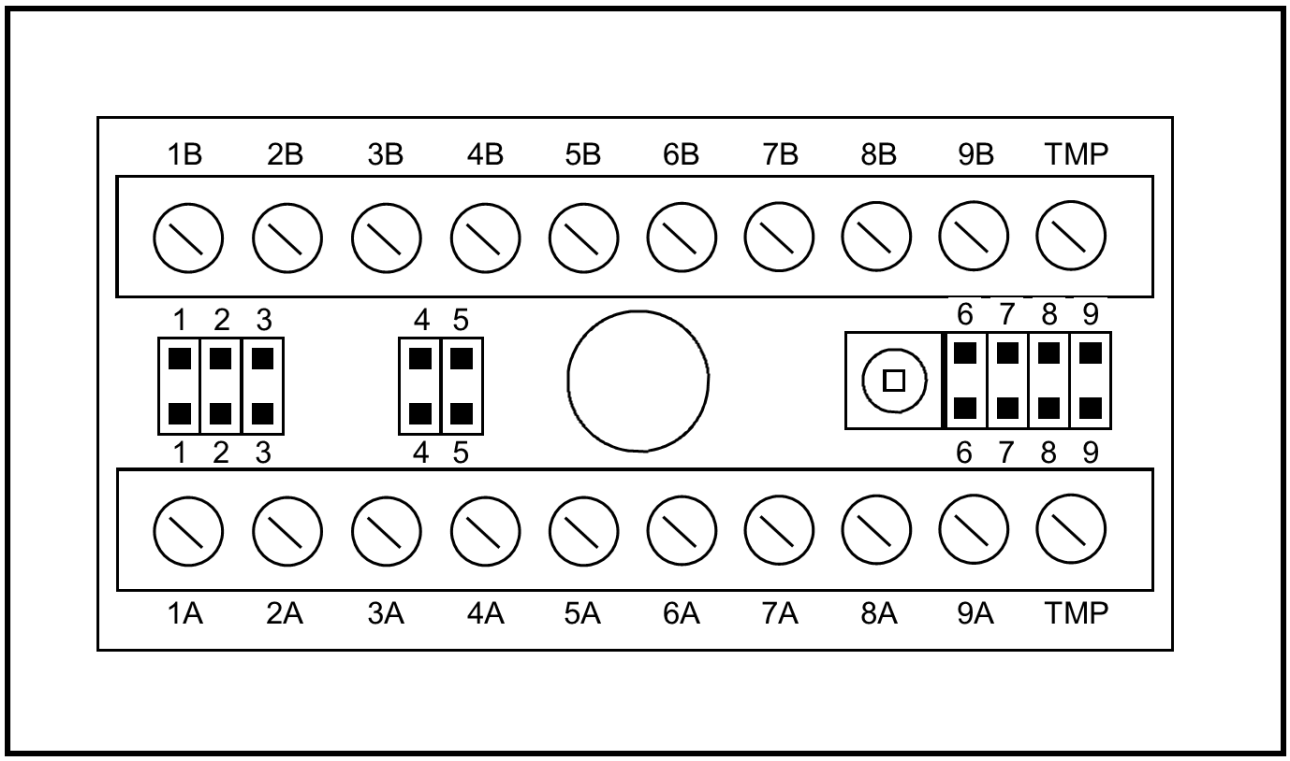

Ensure wiring does not short other connections inside the unit.
The tamper switch circuit is normally closed. Opening the lid will break the circuit.

Rev: June 23