DS-2TD2637T-10/QY
Anti-corrosion Bi-spectrum Network Bullet Camera

Hikvision DS-2TD2637T-10QY Anti-corrosion Bi-spectrum Network Bullet Camera is applied to perimeter protection and fire-prevention purposes in critical infrastructures such as airport, railway, prison, power station, and 4S stores. With the vanadium oxide uncooled focal plane sensor, it enhances the thermal image quality. It adopts anti-corrosion coating to meet the requirements of used in anti-corrosion environment.

Key Feature

- 384 × 288 resolution, 17 µm, VOx UFPA, NETD < 35 mK (25°C, F1.0)
- Video content analysis: vehicle/human classification
- Temperature exception alarm for fire prevention, -20°C to 550°C (-4°F to 1022°F), Max. (± 2°C, ± 2%)
- Smoking detection Algorithm
- Image processing technology: linear, histogram, self-adaptive thermal AGC mode, DDE, 3D DNR
- High quality detector with 10 years guarantee

▪ Specification

Thermal Module	
Image Sensor	Vanadium Oxide Uncooled Focal Plane Arrays
Resolution	384 × 288
Pixel Pitch	17 µm
Spectral Range	8 µm to 14 µm
Focal Length	9.7 mm
IFOV	1.75 mrad
Aperture	F1.0
Field of View	37.5° × 28.5° (H × V)
Min. Focusing Distance	1 m
Digital Zoom	× 2, × 4
Optical Module	
Image Sensor	1/2.7" Progressive Scan CMOS
Resolution	2688 × 1520
Min. Illumination	0.0089Lux @ (F1.6, AGC ON) ,0 Lux with IR
Field of View	84° × 44.8° (H × V)
Focal Length	4 mm
Shutter Speed	1 s to 1/100,000 s
White Balance	MWB/AWB1/Locked WB/Fluorescent Lamp/Incandescent Lamp/Warm Light Lamp/Natural Light
Day & Night Mode	IR Cut Filter with Auto Switch
WDR	120 dB
Aperture	F1.6
Image Effect	
Bi-spectrum Image Fusion	Display the details of optical channel on thermal channel
Picture in Picture	Display partial image of thermal channel on the full screen of optical channel
Target Coloration	Yes. Supported in white hot and black hot mode.
Illuminator	
IR Distance	Up to 40 m
IR Intensity and Angle	Automatically adjusted
Smart Function	
VCA	4 VCA rule types (line crossing, intrusion, region entrance, and region exiting), up to 8 VCA rules in total.
Temperature Measurement	3 temperature measurement rule types, 21 rules in total (10 points, 10 areas, and 1 line)
Temperature Range	-20°C to 550°C (-4°F to 1022°F)
Temperature Accuracy	Max. (± 2°C, ± 2%)
Video and Audio	
Main Stream	Optical channel 50 Hz: 25 fps (2688 × 1520, 1920 × 1080, 1280 × 720) 60 Hz: 30 fps (2688 × 1520, 1920 × 1080, 1280 × 720) Thermal channel 25 fps (1280 × 720, 704 × 576, 352 × 288, 384 × 288)

Sub-stream	Optical channel 50 Hz: 25 fps (704 × 576, 352 × 288) 60 Hz: 30 fps (704 × 480, 352 × 240) Thermal channel 25 fps (704 × 576, 352 × 288, 384 × 288)
Video Compression	Main Stream: H.265/H.264 Sub-Stream: H.265/H.264/MJPEG
Audio Compression	G.722.1/G.711ulaw/G.711alaw/MP2L2/G.726/PCM
Network	
Protocols	IPv4/IPv6, HTTP, HTTPS, 802.1x, QoS, FTP, SMTP, UPnP, SNMP, DNS, DDNS, NTP, RTSP, RTCP, RTP, TCP, UDP, IGMP, ICMP, DHCP, PPPoE, TP, Bonjour, SFTP, SRTP
Network Storage	MicroSD/SDHC/SDXC card (up to 256 GB) local storage, NAS (NFS, SMB/CIFS), Auto Network Replenishment (ANR)
API	ISAPI, HIKVISION SDK, and third-party management platform, Open Network Video Interface (Profile S, Profile G)
Simultaneous Live View	Up to 20 channels
User/Host level	Up to 32 users, 3 levels: Administrator, Operator, User
Security	User authentication (ID and password), MAC address binding, HTTPS encryption, IEEE 802.1x access control, IP address filtering
Client	iVMS-4200, Hik-Connect
Interface	
Alarm Input	2, alarm input (0 VDC to5 VDC)
Alarm Output	2, alarm output (alarm response actions configurable)
Alarm Action	SD recording/Relay output/Smart capture/FTP upload/Email linkage
Audio Input	1, 3.5 mm Mic in/Line in interface Line input: 2 to 2.4 V [p-p], output impedance: 1 KΩ ± 10%
Audio Output	Linear level, impedance: 600 Ω
Communication Interface	1, RJ45 10 M/100 M Self-adaptive Ethernet interface 1, RS-485 interface (half duplex)
Analog Output	1.0 V [p-p]/75 Ω, PAL/NTSC/BNC
General	
Menu Language	32 languages English, Russian, Estonian, Bulgarian, Hungarian, Greek, German, Italian, Czech, Slovak, French, Polish, Dutch, Portuguese, Spanish, Romanian, Danish, Swedish, Norwegian, Finnish, Croatian, Slovenian, Serbian, Turkish, Korean, Traditional Chinese, Thai, Vietnamese, Japanese, Latvian, Lithuanian, Portuguese (Brazil)
Power Supply	24 VAC ± 25%, 12 VDC ± 25%,24 VDC, two-core terminal block PoE (802.3af, class 3)
Power Consumption	24 VAC ± 25%: 0.8 A to 0.5 A, Max. 9.5 W 12 VDC ± 25%: 0.63 A to 1.06 A, Max. 9 W 24 VDC: 0.4 A, Max. 9.5 W PoE (802.3af, class 3): 36 V to 57 V, 0.28 A to 0.17 A, Max. 10 W
Working Temperature/Humidity	Temperature: -40°C to 65°C (-40°F to 149°F) Humidity: 95% or less
Protection Level	IP67 Standard TVS 4000V lightning protection, surge protection, voltage transient protection
Dimension	376.1 mm × 119.1 mm × 118.1 mm (14.81" × 4.68" × 4.65")

Weight	1.82 kg (4.01 lb)

DRI Range Table

** The table is only for reference and the performance may vary according to different environment.*

** The optimal detection, recognition, and identification distances are calculated according to Johnson's Criteria.*

Detection Range: In order to distinguish an object from the background, the object must be covered by 1.5 or more pixels.

Recognition Range: In order to classify the object (animal, human, vehicle, etc.), the object must be covered by 6 or more pixels.

Identification Range: In order to identify the object and describe it in details, the object must be covered by 12 or more pixels.

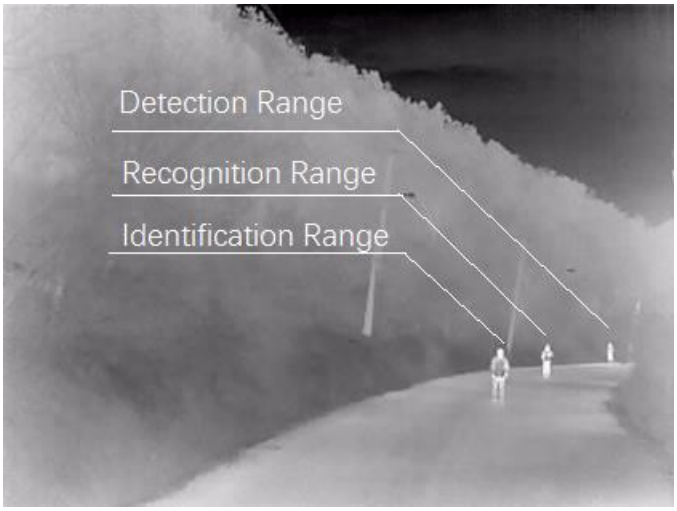

Detection Range (Vehicles: 1.4 × 4.0 m)	Detection Range (Humans: 1.8 × 0.5 m)	Recognition Range (Vehicles: 1.4 × 4.0 m)	Recognition Range (Humans: 1.8 × 0.5 m)	Identification Range (Vehicles: 1.4 × 4.0 m)	Identification Range (Humans: 1.8 × 0.5 m)
902 m	294 m	225 m	74 m	113 m	37 m

Smart Function Table

** The table is only for reference and the performance may vary according to different environment.*

VCA Range (Vehicles: 1.4 × 4.0 m)	VCA Range (Humans: 1.8 × 0.5 m)	Temperature Measurement (Object: 0.2 × 0.2 m)	Temperature Measurement (Object: 1 × 1 m)
210 m	70 m	23 m	114 m

▪ Available Model

DS-2TD2637T-10/QY

▪ Dimension

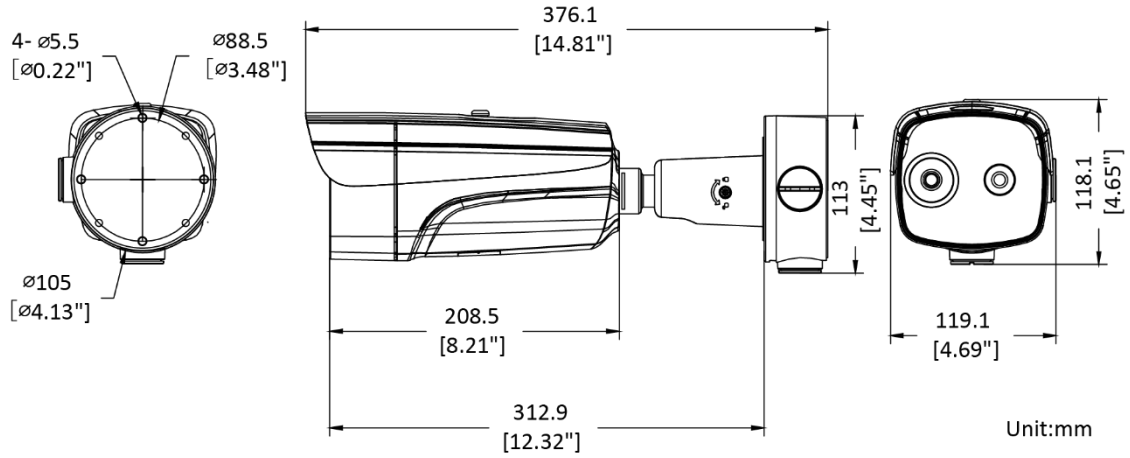

▪ Accessory

▪ Included

DS-1260ZJ-AC#SA

Junction box

▪ Optional

DS-1276ZJ-SUS

Corner Mount

DS-1275ZJ-S-SUS

Vertical pole mount

COMPLIANCE NOTICE: The thermal series products might be subject to export controls in various countries or regions, including without limitation, the United States, European Union, United Kingdom and/or other member countries of the Wassenaar Arrangement. Please consult your professional legal or compliance expert or local government authorities for any necessary export license requirements if you intend to transfer, export, re-export the thermal series products between different countries.

Distributed by

Headquarters
No.555 Qianmo Road, Binjiang District,
Hangzhou 310051, China
T +86-571-8807-5998
overseasbusiness@hikvision.com

Hikvision USA
T +1-909-895-0400
sales.usa@hikvision.com

Hikvision Europe
T +31-23-5542770
sales.eu@hikvision.com

Hikvision UK & Ireland
T +01628-902140
sales.uk@hikvision.com

Hikvision UAE
T +971-4-4432090
salesme@hikvision.com

Hikvision Russia
T +7-495-669-67-99
saleru@hikvision.com

Hikvision Australia
T +61-2-8599-4233
salesau@hikvision.com

Hikvision Italy
T +39-0438-6902
info.it@hikvision.com

Hikvision South Africa
Tel: +27 (10) 0351172
sale.africa@hikvision.com

Hikvision Singapore
T +65-6684-4718
sg@hikvision.com

Hikvision Korea
T +82-(0)31-731-8817
sales.korea@hikvision.com

Hikvision India
T +91-22-28469900
sales@pramahikvision.com

Hikvision Brazil
T +55 11 3318-0050
Latam.support@hikvision.com

Hikvision France
T +33(0)1-85-330-450
info.fr@hikvision.com

Hikvision Spain
T +34-91-737-16-55
info.es@hikvision.com

Hikvision Poland
T +48-22-460-01-50
info.pl@hikvision.com

Hikvision Canada
T +1-866-200-6690
sales.canada@hikvision.com

Hikvision Turkey
T +90 (216)521 7070- 7074
sales.tr@hikvision.com

Hikvision Kazakhstan
T +7-727-9730667
nikia.panfilov@hikvision.ru

Hikvision Tashkent
T +99-87-1238-9438
uzb@hikvision.ru

Hikvision Indonesia
T +62-21-2933759
Sales.Indonesia@hikvision.com

Hikvision Thailand
T +662-275-9949
sales.thailand@hikvision.com

Hikvision Malaysia
T +601-7652-2413
sales.my@hikvision.com

Hikvision Vietnam
T +84-974270888
sales.vt@hikvision.com

Hikvision Hong Kong
T +852-2151-1761
info.hk@hikvision.com

Hikvision Colombia
sales.colombia@hikvision.com

© Hikvision Digital Technology Co., Ltd. 2020 | Data subject to change without notice |